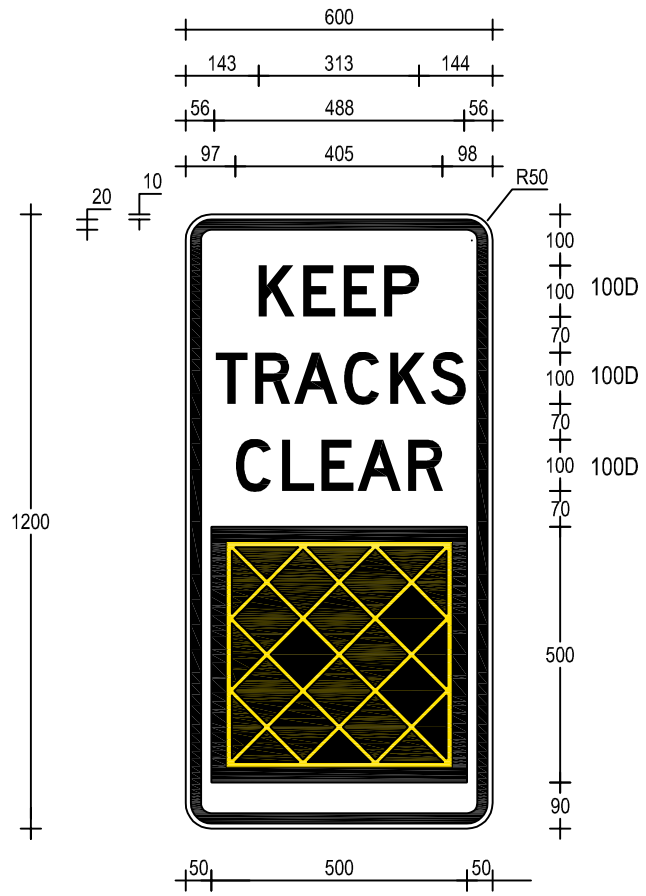

G9-67-2
600 x 1200

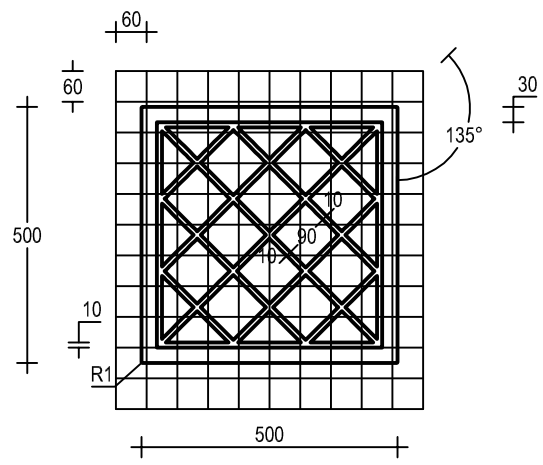

Symbol Detail

ACCEPTED FOR CONSTRUCTION

QR CODE	Scan to Check Document Version	REV	DATE	AMENDMENT / REVISION DESCRIPTION	APPROVAL
		01	23-08-18	AS Fonts & material classification revised	P.Oliver

DRAWING FILE LOCATION / NAME: H:\SIGNS\TTT\DRAWINGS\PLOT\REG\R9-239n.DWG

MATERIALS: ALUMINIUM SIGN
BLACK LEGEND SYMBOL AND BORDER
ON AS1906.1 CL.400 WHITE REFLECTORISED GROUND
SYMBOL : AS1906.1 CL.400 YELLOW LINES ON BLACK GRD

ALL DIMENSIONS ARE IN MILLIMETRES UNLESS OTHERWISE SPECIFIED

SIGN TO BE MANUFACTURED IN ACCORDANCE WITH RMS QA SPECIFICATION 3400

DESIGNED
SIGNED
NAME M.Davies
DATE 19-06-19

REVIEWED
SIGNED
NAME J.Rozos
DATE 19-06-19

VERIFIED
SIGNED
NAME P.Oliver
TITLE Manager Guidance & Delineation
DATE

Transport Roads & Maritime Services
NSW GOVERNMENT

PREPARED BY
GUIDANCE AND DELINEATION UNIT
TRAFFIC ENGINEERING SERVICES
TECHNICAL AND PROJECT SERVICES

GUIDE SIGN
G9-67-2
KEEP TRACKS CLEAR (SYMBOLIC)

A3

SHEET 1 OF 1

SCALE: 1:10 | EDMS No. XXXXXXXXXX | SHEET No. 1 | ISSUE 01

THIS DRAWING MAY BE PREPARED IN COLOUR AND MAY BE INCOMPLETE IF COPIED

50mm ON A3 SIZE ORIGINAL

© Roads and Maritime Services