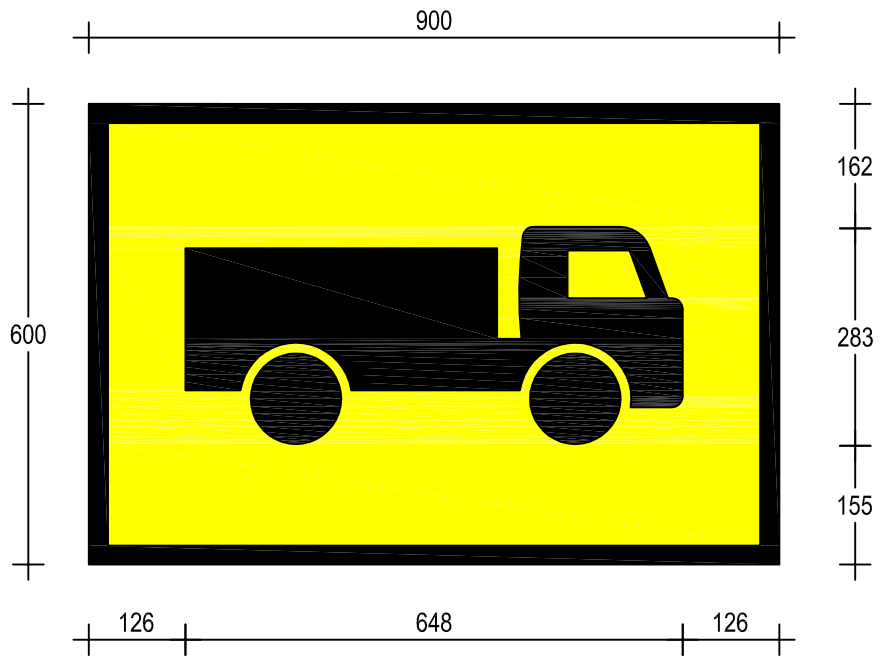

T2-25

900 x 600

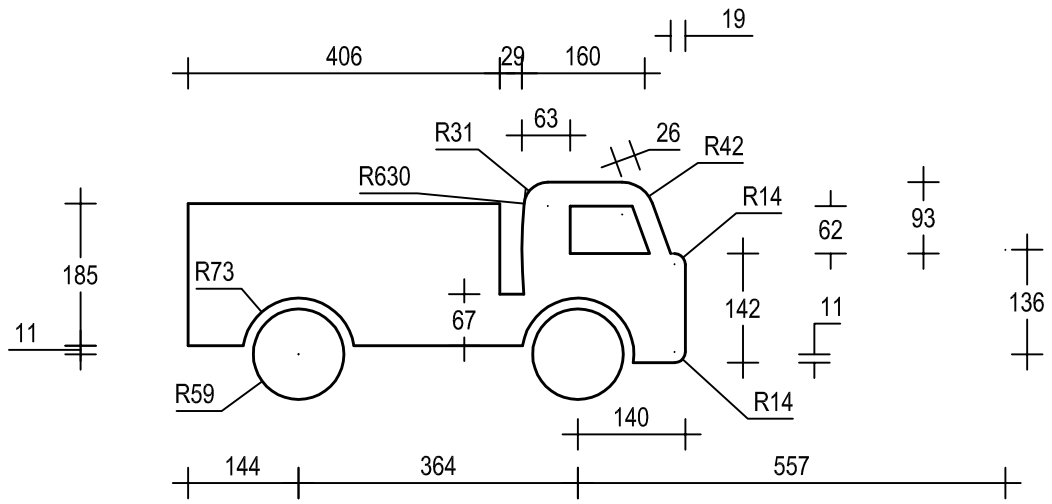

ACCEPTED FOR CONSTRUCTION

QR CODE Scan to Check Document Version	REV	DATE	AMENDMENT / REVISION DESCRIPTION	APPROVAL
	01	23-08-18	AS Fonts & material classification revised	P.Oliver

DRAWING FILE LOCATION / NAME: H:\SIGNS\TTT\DRAWINGS\PLOT\TEMP\T2-25.DWG

MATERIALS: ALUMINIUM SIGN
BLACK SYMBOL AND BORDER
ON AS1906.1 CL.400 YELLOW REFLECTORISED GROUND

DESIGNED
SIGNED
NAME M.Davies
DATE 31-07-19

REVIEWED
SIGNED
NAME J.Rozos
DATE 31-07-19

VERIFIED
SIGNED
NAME P.Oliver
TITLE Manager Guidance & Delineation
DATE 31-07-19

Transport Roads & Maritime Services
NSW GOVERNMENT

PREPARED BY
GUIDANCE AND DELINEATION UNIT
TRAFFIC ENGINEERING SERVICES
TECHNICAL AND PROJECT SERVICES

TEMPORARY SIGN
T2-25
TRUCK (Crossing or Entering) (Symbolic)

A3

SHEET 1 OF 1

SCALE: 1:10 | EDMS No. XXXXXXXXXX | SHEET No. 1 | ISSUE 01

ALL DIMENSIONS ARE IN MILLIMETRES UNLESS OTHERWISE SPECIFIED

SIGN TO BE MANUFACTURED IN ACCORDANCE WITH RMS QA SPECIFICATION 3400

THIS DRAWING MAY BE PREPARED IN COLOUR AND MAY BE INCOMPLETE IF COPIED

50mm ON A3 SIZE ORIGINAL

© Roads and Maritime Services