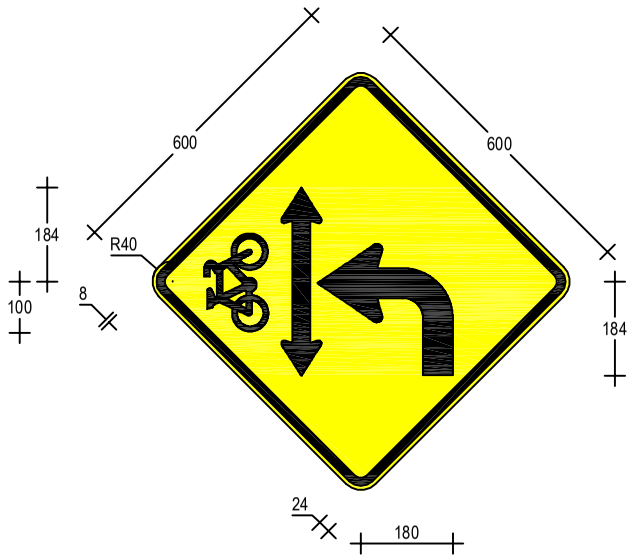

W8-200n(A)
600 x 600

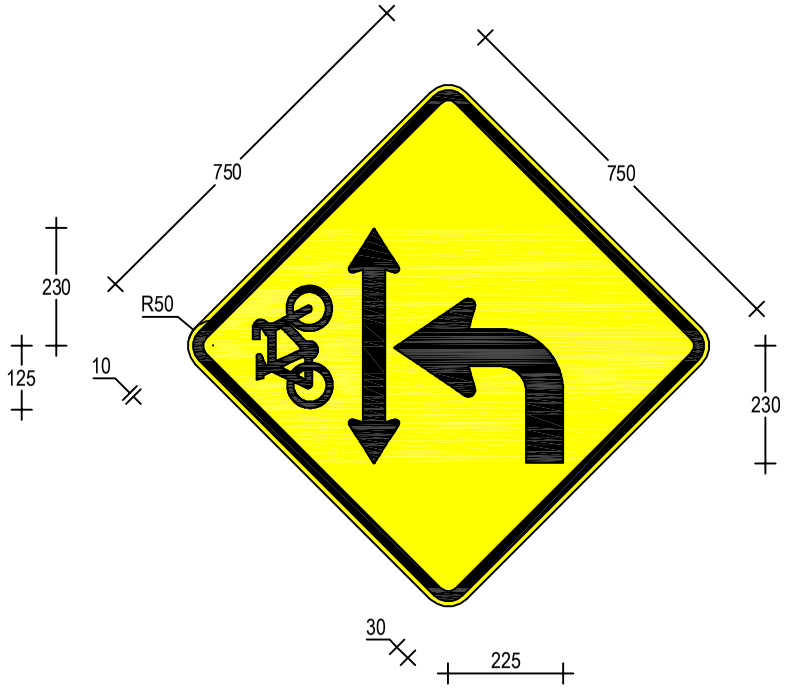

W8-200n(B)
750 x 750

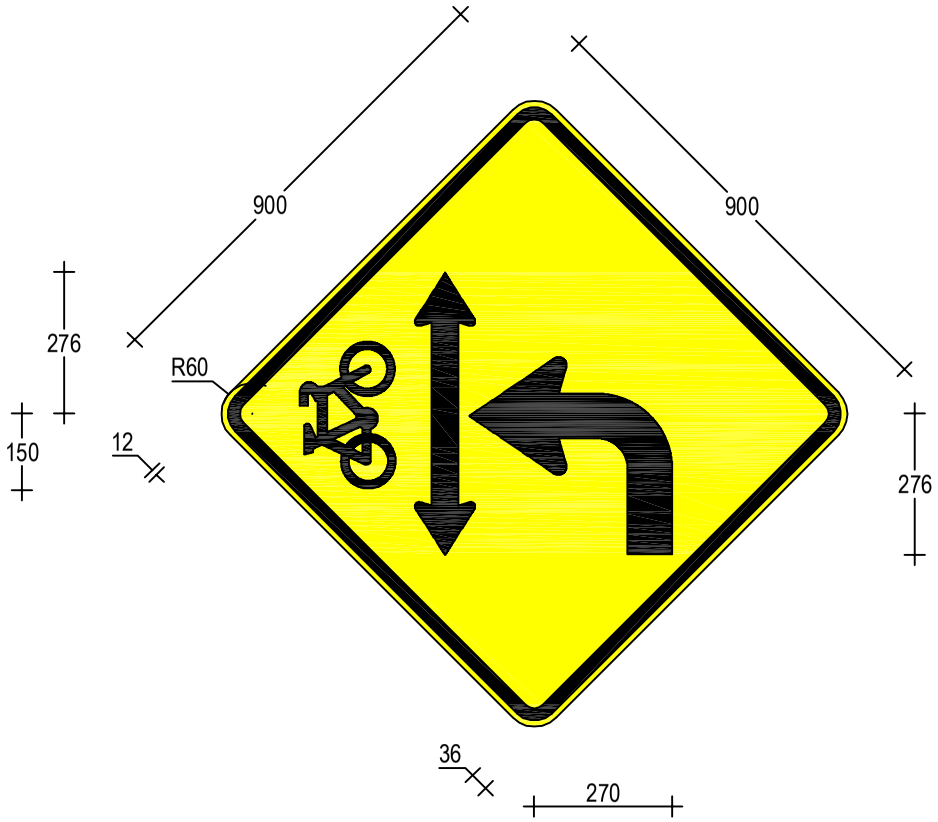

W8-200n(C)
900 x 900

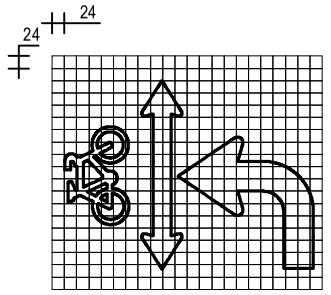

Symbol Detail

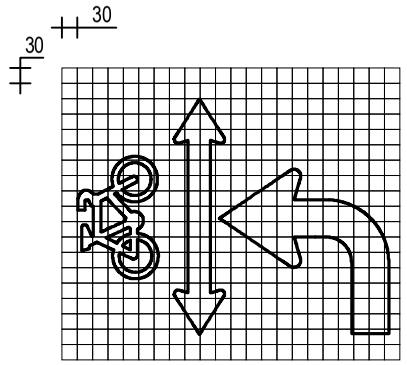

Symbol Detail

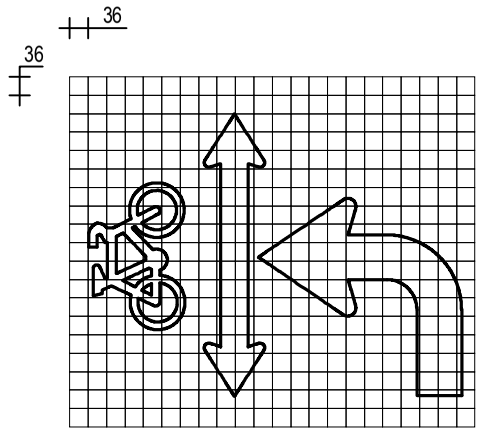

Symbol Detail

ACCEPTED FOR CONSTRUCTION

QR CODE Scan to Check Document Version	REV	DATE	AMENDMENT / REVISION DESCRIPTION	APPROVAL
	01	23-08-18	AS Fonts & material classification revised	P.Oliver

DRAWING FILE LOCATION / NAME: H:\SIGNS\TTT\DRAWINGS\PLOT\WARN\W8-200N.DWG

MATERIALS: ALUMINIUM SIGN
BLACK SYMBOL AND BORDER
ON AS1906.1 CL.400 YELLOW REFLECTORISED GROUND

DESIGNED
SIGNED
NAME M.Davies
DATE 31-07-19

REVIEWED
SIGNED
NAME J.Rozos
DATE 31-07-19

VERIFIED
SIGNED
NAME P.Oliver
TITLE Manager Guidance & Delineation
DATE 31-07-19

Transport Roads & Maritime Services
NSW GOVERNMENT

PREPARED BY
GUIDANCE AND DELINEATION UNIT
TRAFFIC ENGINEERING SERVICES
TECHNICAL AND PROJECT SERVICES

WARNING SIGN
W8-200N
BIKE CROSSING ON SIDE STREET
(Symbolic)

A

SHEET 1 OF 1

SCALE: 1:10 | EDMS No. XXXXXXXXXX | SHEET No. 1 | ISS 0

ALL DIMENSIONS ARE IN MILLIMETRES UNLESS OTHERWISE SPECIFIED

SIGN TO BE MANUFACTURED IN ACCORDANCE WITH RMS QA SPECIFICATION 3400

THIS DRAWING MAY BE PREPARED IN COLOUR AND MAY BE INCOMPLETE IF COPIED

50mm ON A3 SIZE ORIGINAL

© Roads and Maritime Servic