APPENDIX A

FIGURE SHOWING LAYOUT OF CASTLE STREET CATCHMENT DRAINS MODEL (SKM, 2005)

Figure C-3
Castle Street Catchment (BC279)

Catchments to Pits

Legend

- ILSAX Model Based on 2m Contours
- Open Channel (Catchment BC279)
- Pipes (Catchment BC279)
- Property Boundaries
- 0.5m Contours (from ALS Data)
- 2m Contours (ALS not available)
- Pits (Catchment BC279)
- DRAINS Sub Catchment Based on ALS

N

0 50 100 200
Metres

Project No.: EN01548
Printed: 19/05/2005
File: I:\ENVR\Projects\EN01548\Technical\spatial\Report_Figures\FinnalReport\FigureC_3_castlest_PitCatchments_003.mxd

SKM

APPENDIX B

PLANS AND LONG SECTIONS SHOWING PROPOSED CROSSINGS OF EXISTING UTILITIES

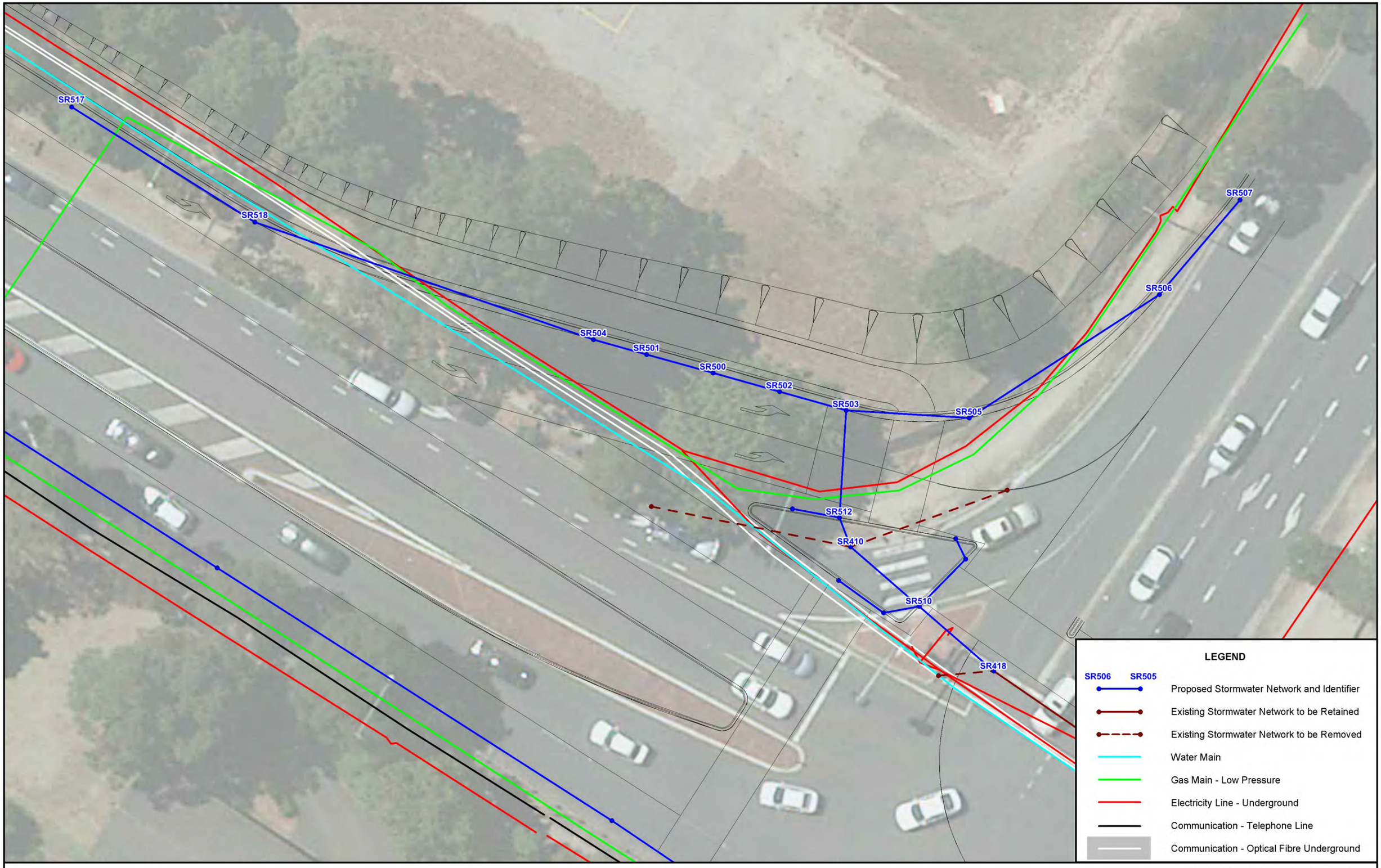

N

2.5 0 2.5 5 7.5 m

Scale: 1:250

Lyall & Associates

SHOWGROUND ROAD UPGRADE
DRAINAGE INVESTIGATION

Figure B1

PLAN SHOWING EXISTING UTILITIES IN VICINITY OF PROPOSED PIPE CROSSING IN PENNANT STREET

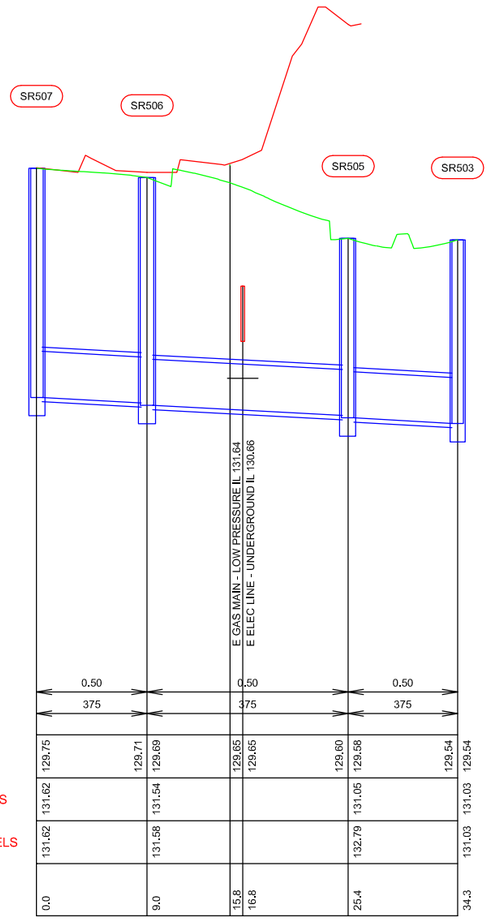

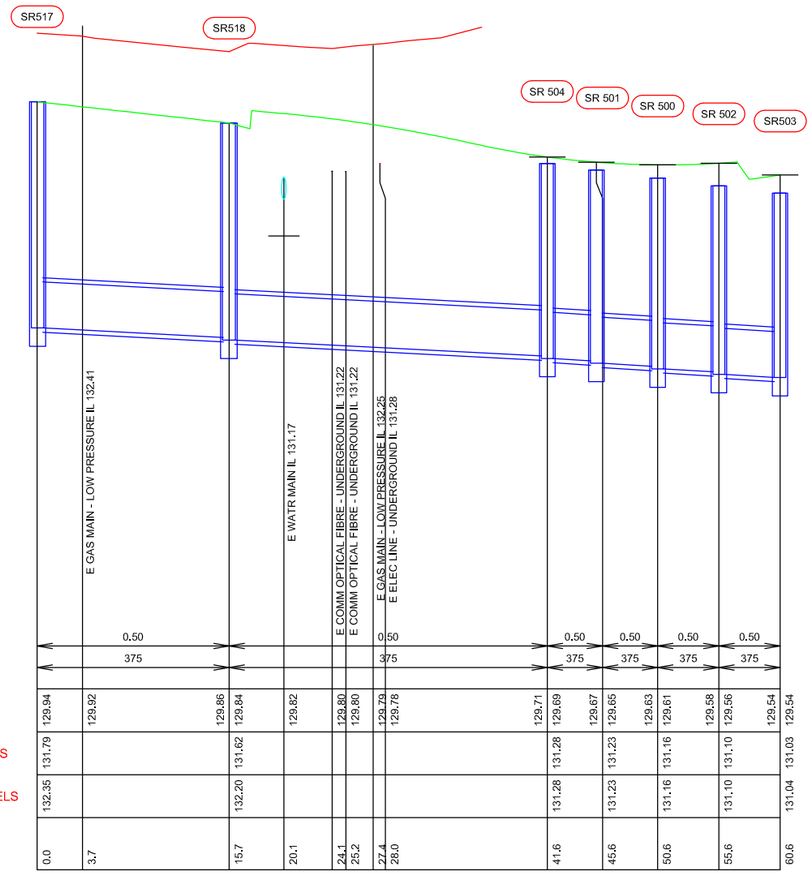

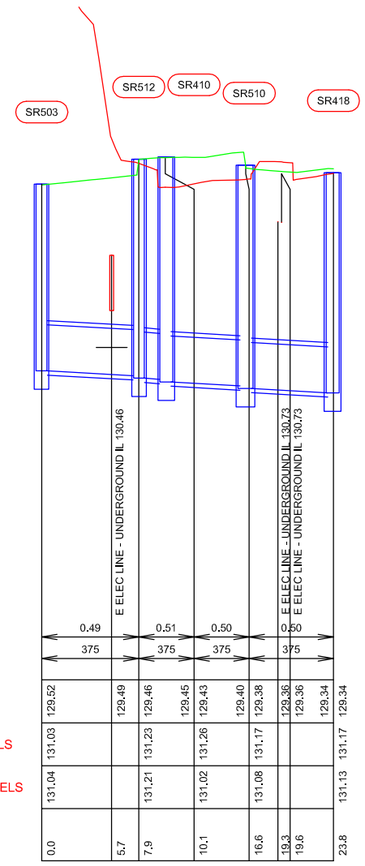

NOTE:
HORIZONTAL LINE BENEATH EXISTING UTILITY REPRESENTS 300 COVER TO UNDERSIDE

CONCEPT DESIGN ONLY
NOT FOR CONSTRUCTION

Scale
Vertical 1:50
Horizontal 1:500

LEGEND

- Existing Ground Surface
- Proposed Road Surface
- Proposed Pavement Drainage Line
- SR507 — Pit Identifier

SHOWGROUND ROAD UPGRADE
DRAINAGE INVESTIGATION

Figure B2

LONGSECTION SHOWING EXISTING UTILITIES IN VICINITY OF PROPOSED PIPE CROSSING IN PENNANT STREET

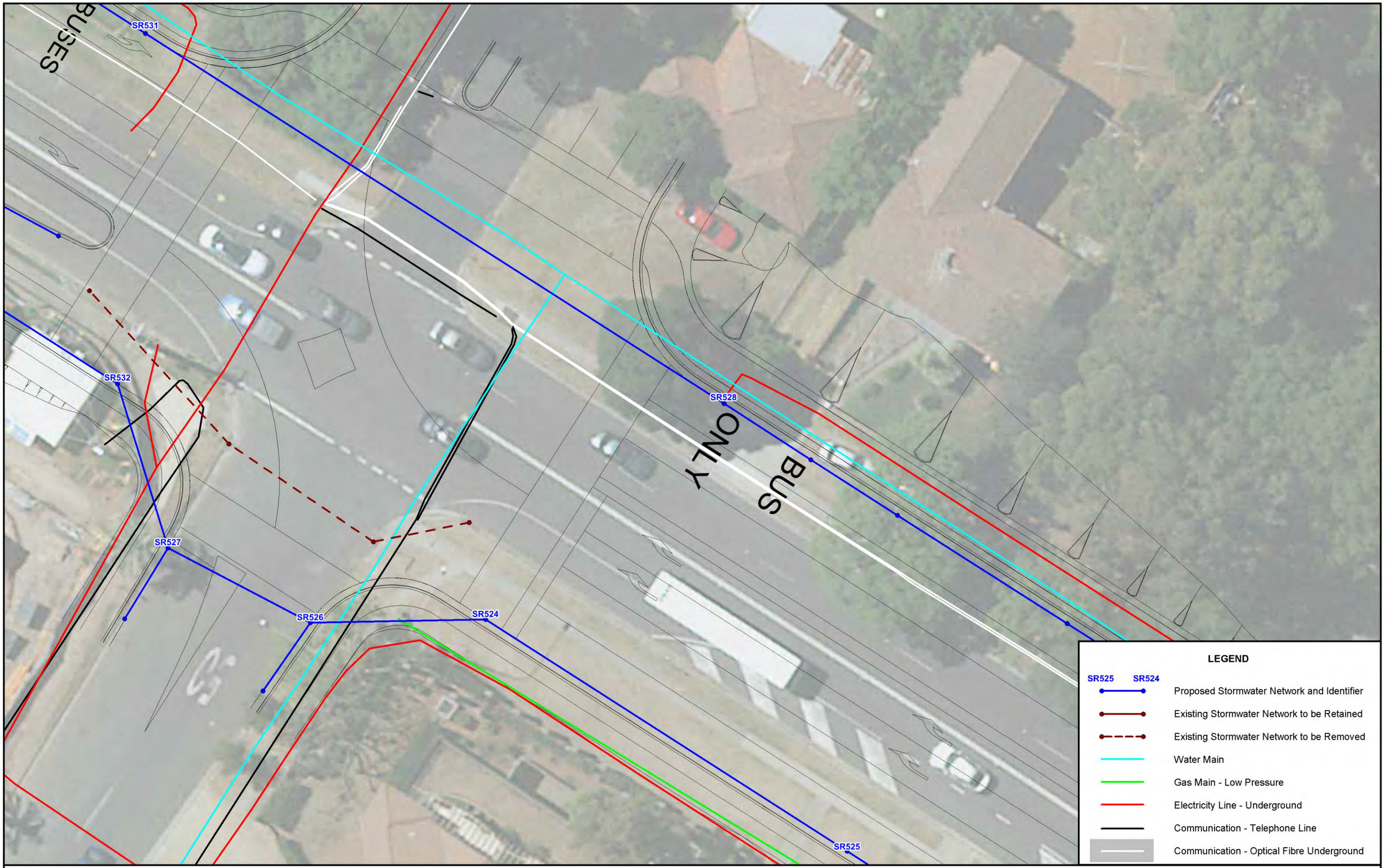

N

2.5 0 2.5 5 7.5 m

Scale: 1:250

Lyall & Associates

SHOWGROUND ROAD UPGRADE
DRAINAGE INVESTIGATION

Figure B3

PLAN SHOWING EXISTING UTILITIES IN VICINITY OF PROPOSED PIPE CROSSING NEAR CHERITON AVENUE INTERSECTION

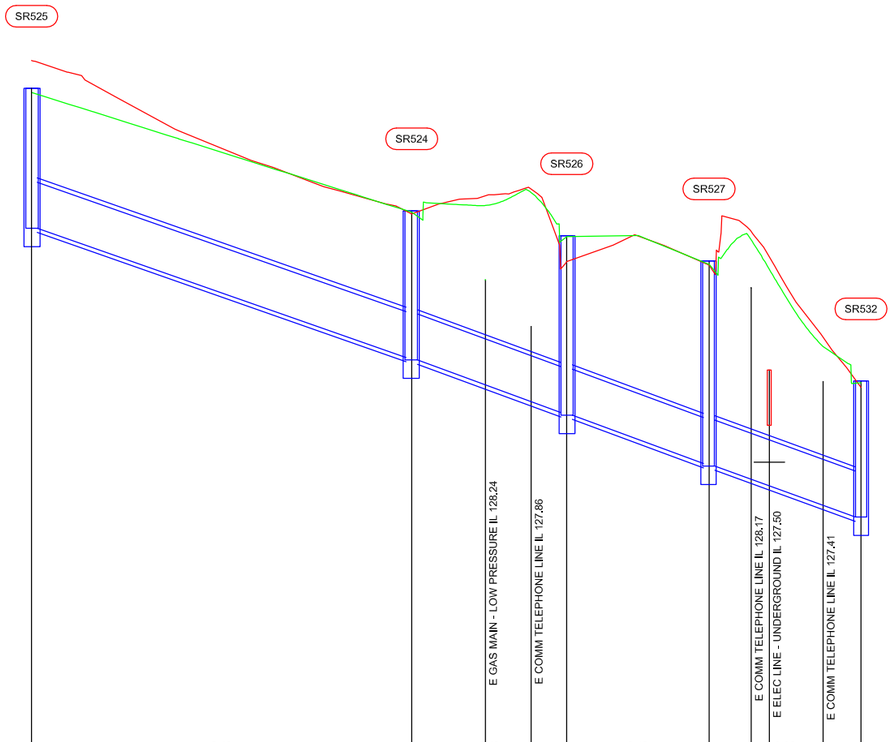

PIPE GRADE (%)	3.40								3.40								3.40						3.36			
PIPE DIAMETER (mm)	375								375								375						375			
DATUM R.L. 124																										
PIPE INVERT LEVELS	128.66							127.61	127.58				127.38			127.24	127.16	127.14				126.74	126.72	126.61	126.56		126.40	126.30	126.30
DESIGN SURFACE LEVELS	129.77								128.79									128.59					128.37						127.40
EXISTING SURFACE LEVELS	130.03								128.77									128.39					128.36						127.36
CHAINAGE	0.0								31.0				37.0			40.7		43.6					55.2	58.7	60.2		64.5		67.6

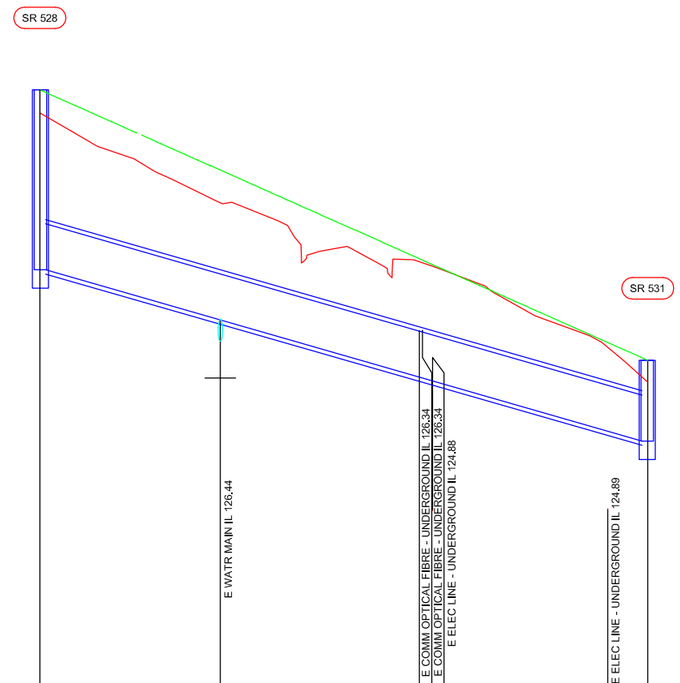

PIPE GRADE (%)	2.82																							
PIPE DIAMETER (mm)	375																							
DATUM R.L. 123																								
PIPE INVERT LEVELS	126.84							126.43							125.96		125.96	125.93					125.52	125.44	125.44
DESIGN SURFACE LEVELS	128.31																								126.10
EXISTING SURFACE LEVELS	128.12																								125.92
CHAINAGE	0.0							14.7							31.0		31.2	32.0					46.3		49.6

NOTE:
HORIZONTAL LINE BENEATH EXISTING UTILITY REPRESENTS 300 COVER TO UNDERSIDE

CONCEPT DESIGN ONLY
NOT FOR CONSTRUCTION

Scale
Vertical 1:50
Horizontal 1:500

LEGEND

- Existing Ground Surface
- Proposed Road Surface
- Proposed Pavement Drainage Line
- SR525 — Pit Identifier

SHOWGROUND ROAD UPGRADE
DRAINAGE INVESTIGATION

Figure B4

LONGSECTION SHOWING EXISTING UTILITIES IN VICINITY
OF PROPOSED PIPE CROSSING NEAR CHERITON AVENUE INTERSECTION

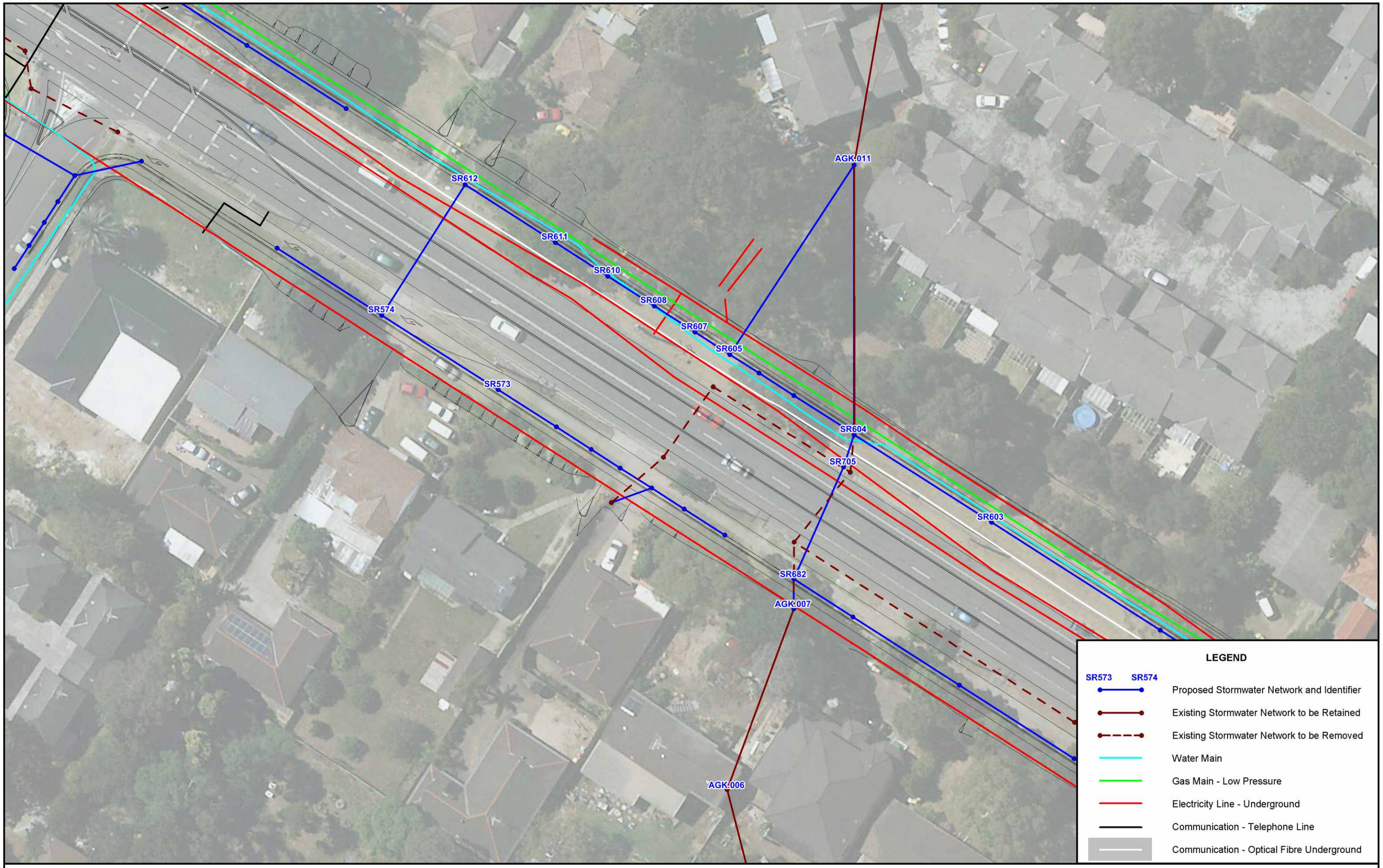

N

5 0 5 10 15 m

Scale: 1:500

Lyall & Associates

SHOWGROUND ROAD UPGRADE
DRAINAGE INVESTIGATION

Figure B5

PLAN SHOWING EXISTING UTILITIES SOUTH OF RESIDENTIAL TOWNHOUSE COMPLEX

✳ **NOTE:**
PROPOSED 2 OFF 525 mm RCP'S FOLLOW APPROXIMATELY THE SAME VERTICAL AND HORIZONTAL ALIGNMENT AS EXISTING TRANSVERSE DRAINAGE STRUCTURE.

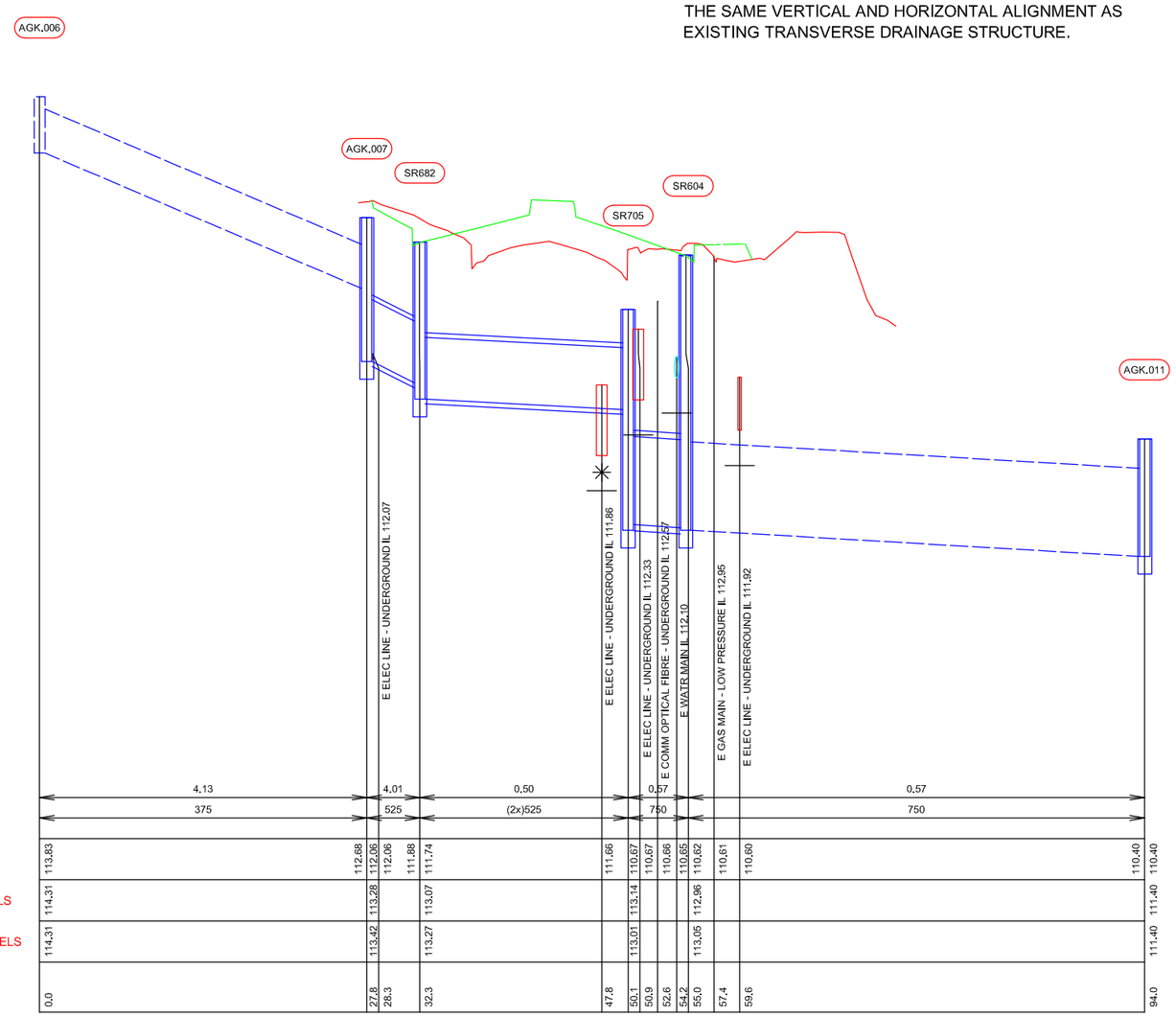

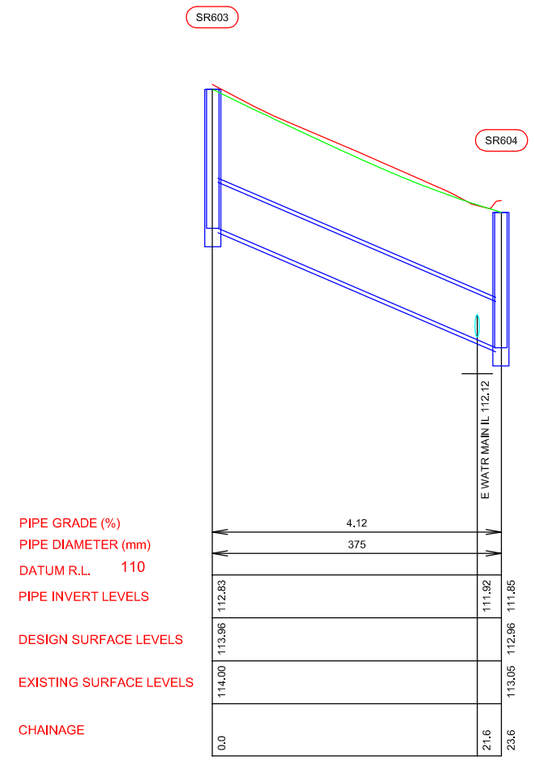

NOTE:
HORIZONTAL LINE BENEATH EXISTING UTILITY REPRESENTS 300 COVER TO UNDERSIDE

CONCEPT DESIGN ONLY
NOT FOR CONSTRUCTION

Scale
Vertical 1:50
Horizontal 1:500

LEGEND

- Existing Ground Surface
- Proposed Road Surface
- Proposed Pavement Drainage Line
- AGK.006 — Pit Identifier
- Existing Drainage Line To Be Retained

SHOWGROUND ROAD UPGRADE
DRAINAGE INVESTIGATION

Figure B6
Sheet 1 of 2

LONGSECTION SHOWING EXISTING UTILITIES
SOUTH OF TOWNHOUSE COMPLEX

✳ **NOTE:**
DRAWINGS SHOW 132 KV LINE LOCATED IN BORED CONDUIT OF APPROXIMATELY 450 mm DIAMETER

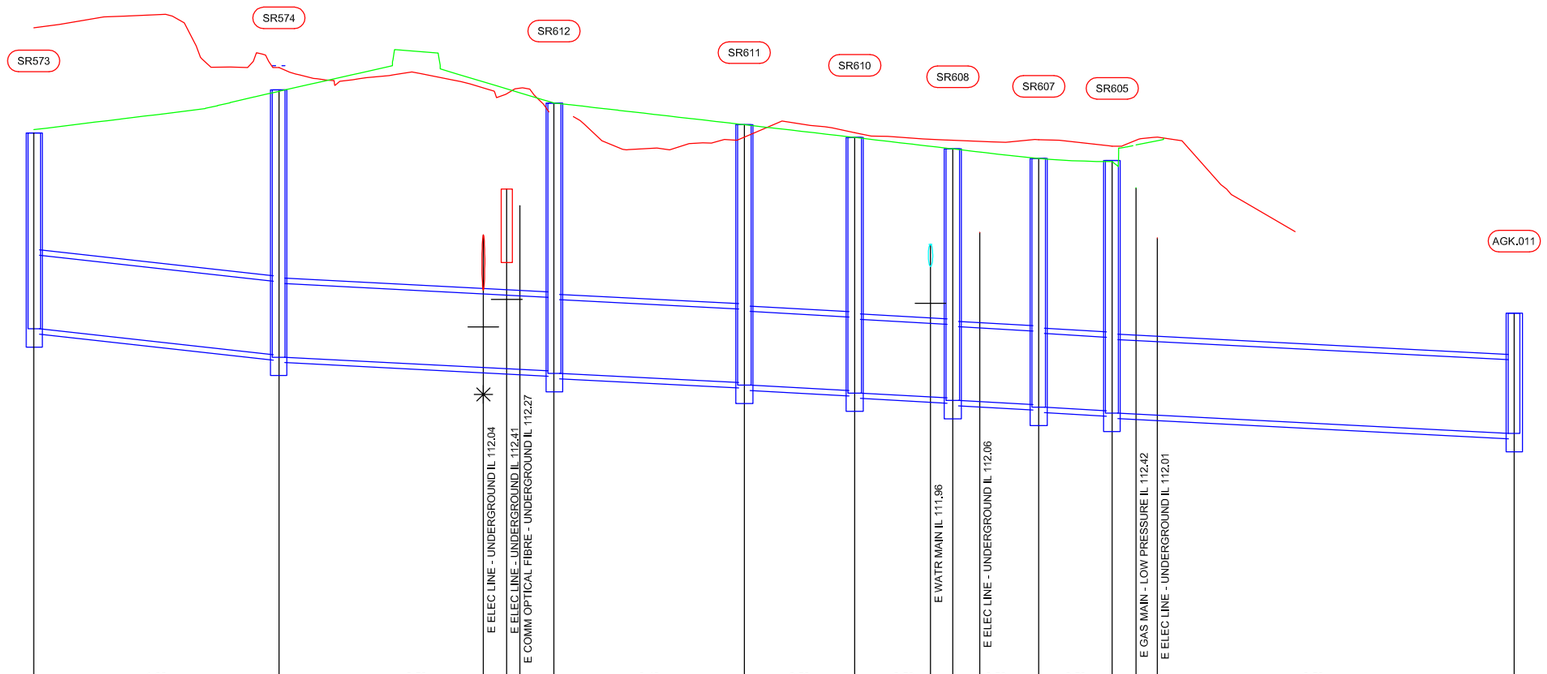

PIPE GRADE (%)	1.06						0.50					0.48		0.50		0.50			0.50		0.50		0.50
PIPE DIAMETER (mm)	600						600					600		600		600			600		600		600
DATUM R.L. 108																							
PIPE INVERT LEVELS	111.27					111.06	111.04					110.91		110.83	110.81		110.77	110.75		110.72	110.69	110.68	110.65
DESIGN SURFACE LEVELS	112.90						113.21					113.11			112.94			112.83			112.74		
EXISTING SURFACE LEVELS	113.73						113.40					113.11			112.83			112.87			112.81		
CHAINAGE	0.0						20.0					42.4			57.9			67.0		73.1	75.0	77.1	

PIPE GRADE (%)																							
PIPE DIAMETER (mm)																							
DATUM R.L. 108																							
PIPE INVERT LEVELS	110.63			110.60	110.58	110.58	110.57													110.42	110.42		
DESIGN SURFACE LEVELS	112.86			112.64																	111.40		
EXISTING SURFACE LEVELS	112.81			112.76																	111.40		
CHAINAGE	82.0			87.9		89.9	91.6													120.7			

NOTE:
HORIZONTAL LINE BENEATH EXISTING UTILITY REPRESENTS 300 COVER TO UNDERSIDE

CONCEPT DESIGN ONLY
NOT FOR CONSTRUCTION

Scale
Vertical 1:50
Horizontal 1:500

LEGEND

- Existing Ground Surface
- Proposed Road Surface
- Proposed Pavement Drainage Line
- SR573 Pit Identifier

SHOWGROUND ROAD UPGRADE
DRAINAGE INVESTIGATION

Figure B6
Sheet 2 of 2

LONGSECTION SHOWING EXISTING UTILITIES
SOUTH OF TOWNHOUSE COMPLEX

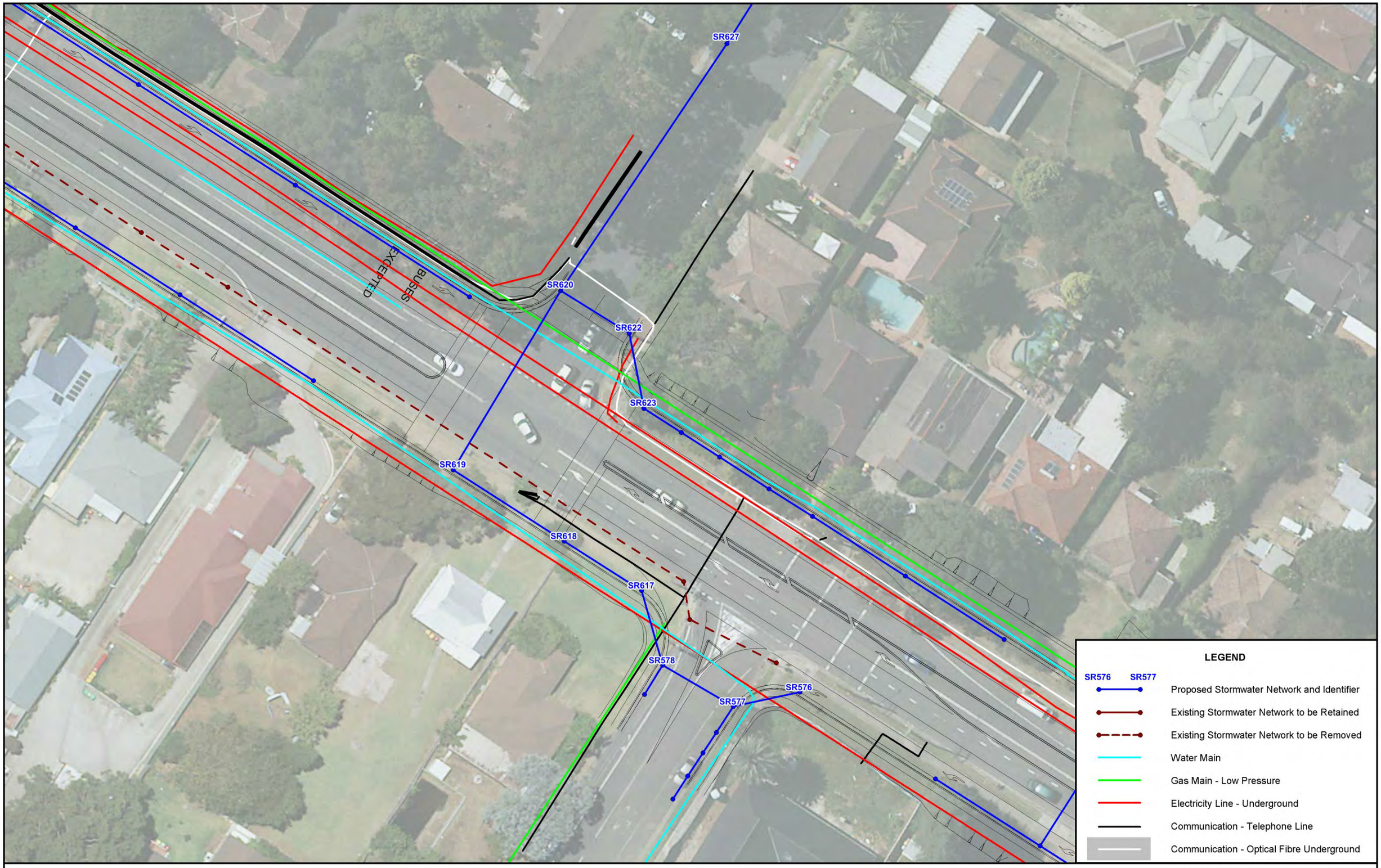

N

5 0 5 10 15 m

Scale: 1:500

Lyall & Associates

SHOWGROUND ROAD UPGRADE
DRAINAGE INVESTIGATION

Figure B7

PLAN SHOWING EXISTING UTILITIES
NEAR ROWALLAN AVENUE INTERSECTION

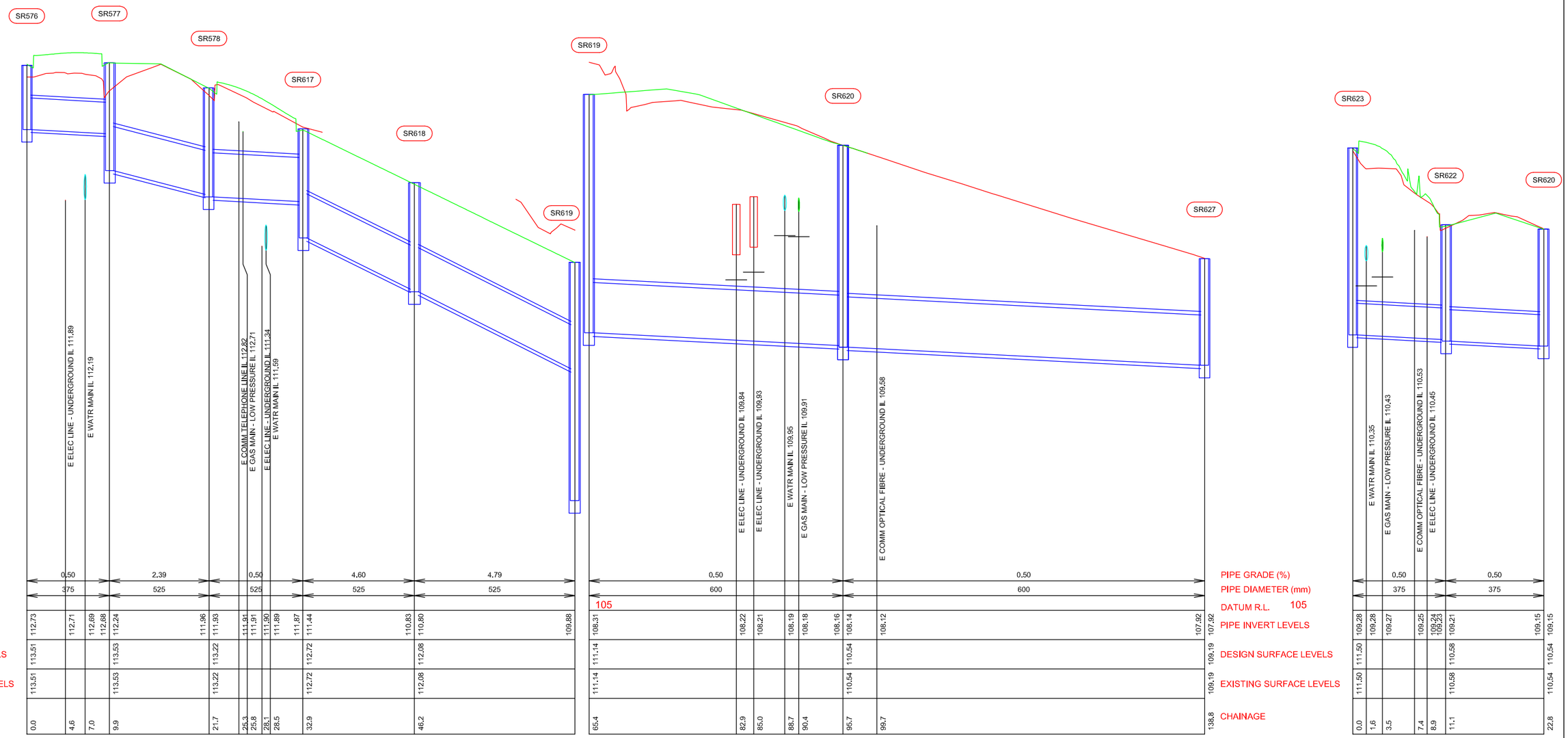

NOTE:
HORIZONTAL LINE BENEATH EXISTING UTILITY REPRESENTS 300 COVER TO UNDERSIDE

CONCEPT DESIGN ONLY
NOT FOR CONSTRUCTION

Scale
Vertical 1:50
Horizontal 1:500

LEGEND

- Existing Ground Surface
- Proposed Road Surface
- Proposed Pavement Drainage Line
- SR576 — Pit Identifier

SHOWGROUND ROAD UPGRADE
DRAINAGE INVESTIGATION

Figure B8

LONGSECTION SHOWING EXISTING UTILITIES
NEAR ROWALLAN AVENUE INTERSECTION

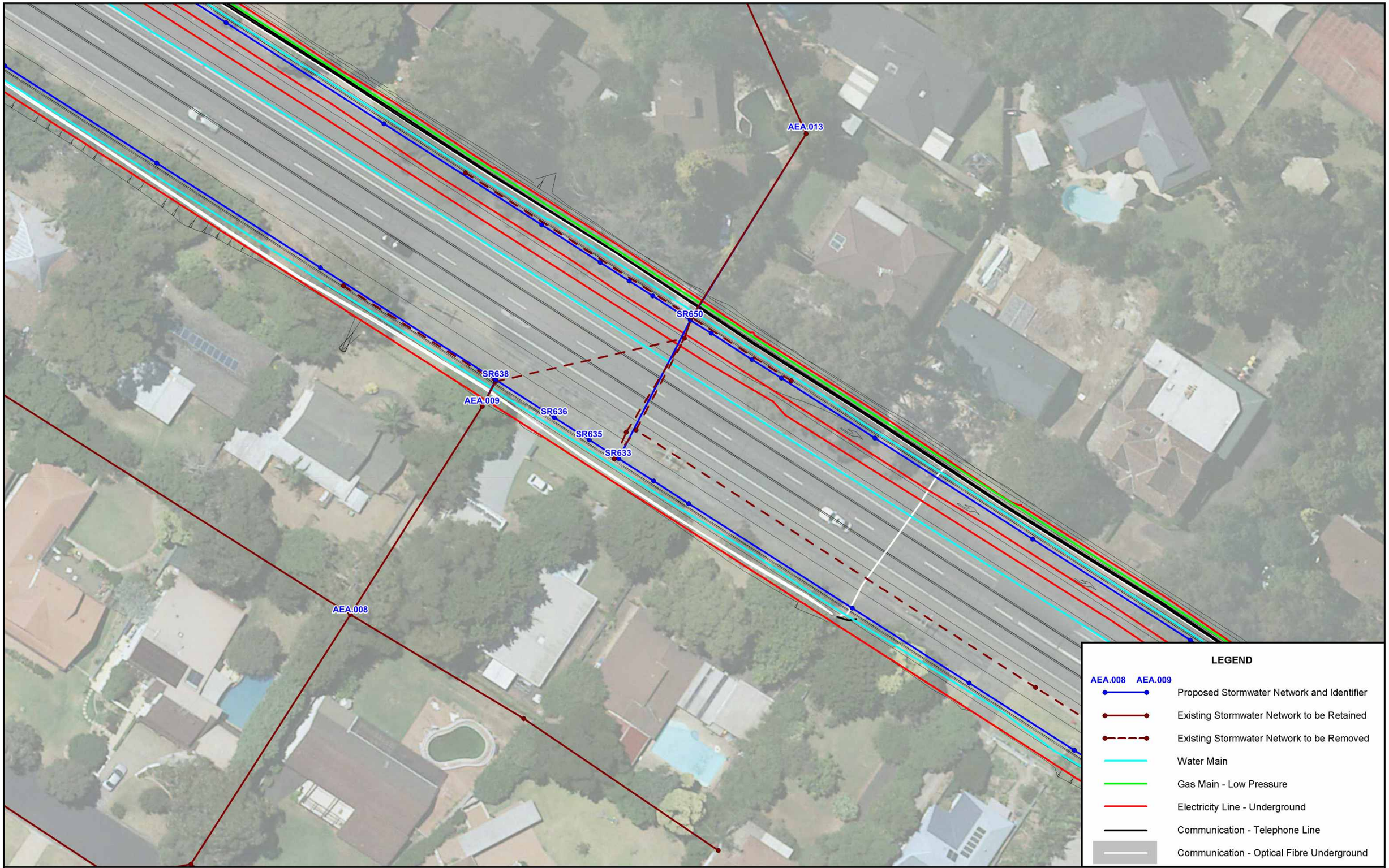

N

5 0 5 10 15 m

Scale: 1:500

Lyall & Associates

SHOWGROUND ROAD UPGRADE
DRAINAGE INVESTIGATION

Figure B9

PLAN SHOWING EXISTING UTILITIES WEST OF ROWALLAN AVENUE AT LOCATION OF SAG

✳ **NOTE:**
PROPOSED 2 OFF 675 mm RCP'S FOLLOW APPROXIMATELY THE SAME VERTICAL AND HORIZONTAL ALIGNMENT AS EXISTING TRANSVERSE DRAINAGE STRUCTURE.

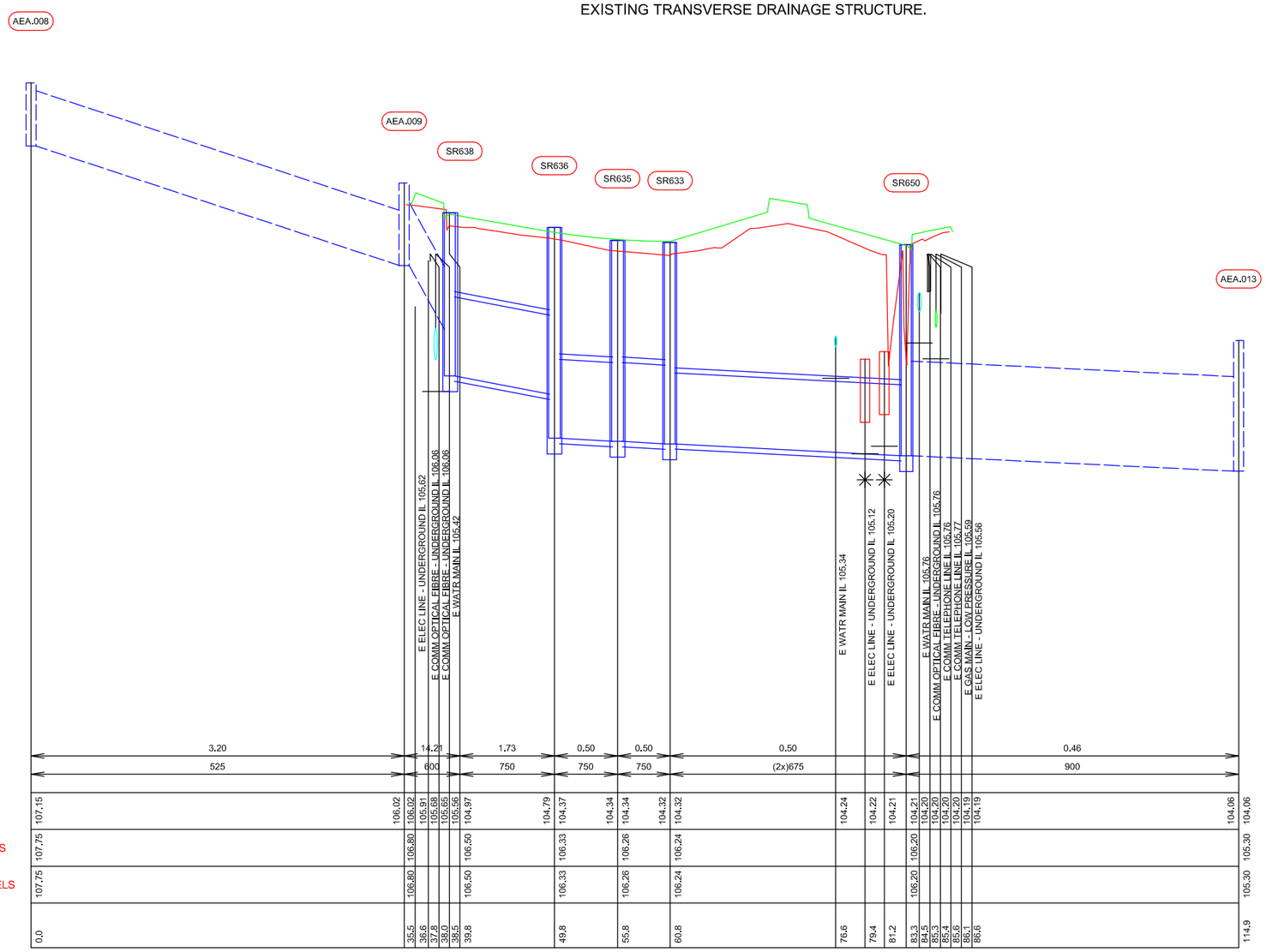

NOTE:
HORIZONTAL LINE BENEATH EXISTING UTILITY REPRESENTS 300 COVER TO UNDERSIDE

CONCEPT DESIGN ONLY
NOT FOR CONSTRUCTION

Scale
Vertical 1:50
Horizontal 1:500

LEGEND

- Existing Ground Surface
- Proposed Road Surface
- Proposed Pavement Drainage Line
- AEA.008 Pit Identifier
- Existing Drainage Line To Be Retained

SHOWGROUND ROAD UPGRADE
DRAINAGE INVESTIGATION

Figure B10

LONGSECTION SHOWING EXISTING UTILITIES
WEST OF ROWALLAN AVENUE AT LOCATION OF SAG

APPENDIX C

ENDEAVOUR ENERGY AS-BUILT PLANS OF EXISTING 132 KV UG FEEDERS 21C

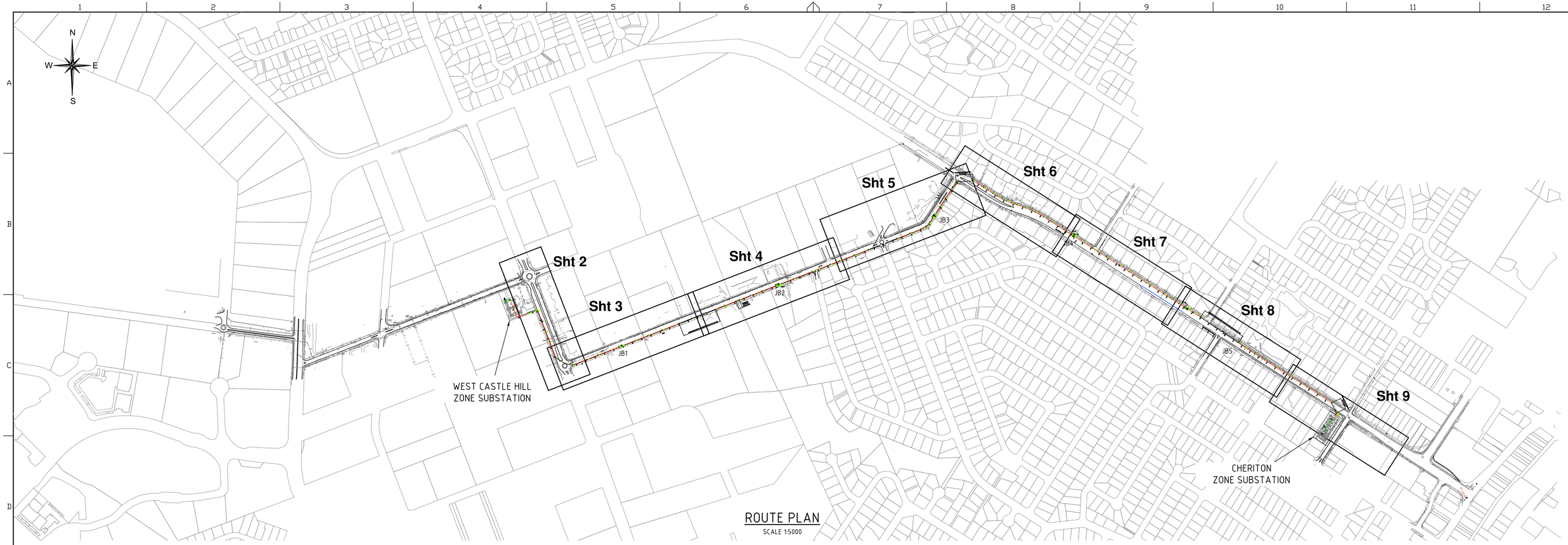

ROUTE PLAN

SCALE 1:5000

SURVEY LEGEND

- WATER SUPPLY PIPE UG
- WATER SUPPLY RECYCLED UG
- SEWER LINE UG
- STORMWATER UG
- GAS UG
- TELSTRA UG
- OPTUS UG
- UECOMM UG
- RTA SS UG
- ELECTRICITY

- MANHOLE
- PILLAR
- JUNCTION BOX/PIT
- SUMP GRATED
- STORMWATER PUMP
- LIGHT POLE
- MANHOLE
- CABLE BOX / PILLAR
- POLE WITH LIGHT
- POLE
- SUBSTATION ABOVE GROUND
- TRANSFORMER ON GROUND
- HYDRANT
- METER
- PADDOCK MARKER
- GAS PIT
- INSPECTION OPENING
- SEWER MANHOLEMANHOLE
- HOARDING / SIGN
- SURVEY MISCELLANEOUS
- INVERT OF PIPE
- LIGHT CONTROL BOX
- LIGHT
- MISCELLANEOUS
- MANHOLE
- MISCELLANEOUS
- PUMP
- POLE
- VALVE
- HYDRANT PILLAR
- WATER METER
- MANHOLE
- MISCELLANEOUS
- TAP
- SCOUR VALVE
- STOP / SLUICE VALVE

LEGEND

- FEEDER 216 132kV UG
- FEEDER 21C 132kV UG
- FEEDER 21C 132kV UG DIRECT BURIED
- FEEDER - FUTURE
- UNDER BORE
- 216 — FEEDER NUMBER
- Sht 2 — SHEET NUMBER
- CAT HOLE
- JOINT BAY

NOTES

1. THIS DESIGN IS BASED ON SINCLAIR KNIGHT MERZ CONCEPT DESIGN EN02161.7 DATED 24/06/2009.
2. ALL TRENCHING & RESTORATION WORKS TO BE CARRIED OUT AS PER RTA SPECIFICATION M209.
3. CLEARANCES TO BE MAINTAINED TO OTHER EXISTING SERVICES.
4. HOT MIX TEMPORARY RESTORATION WHERE CONDUIT BANKS ARE INSTALLED IN EXISTING ROAD PAVEMENT.
5. 6m WIDE EASEMENT WILL BE REQUIRED WHERE CABLES ARE NOT LOCATED WITHIN DEDICATED PUBLIC ROAD.
6. PERMANENT SURVEY MARKS MAY EXIST IN AREA AND ARE TO BE LOCATED BY SURVEYOR PRIOR TO COMMENCEMENT OF WORKS.
7. ALL SERVICE SEARCHES MUST BE OBTAINED AND CHECKED BEFORE COMMENCEMENT OF WORKS.
8. THE TRENCH LINE IS TO BE SURVEYED & PEGGED BY THE CONTRACTOR AND APPROVED BY INTEGRAL PRIOR TO COMMENCEMENT OF ANY WORK.
9. TRENCH LOCATIONS IN SHOWGROUND ROAD ARE TO BE IN ACCORDANCE WITH PROPERTY BOUNDARY AND NOT NECESSARILY EXISTING KERB LINES.
10. DILAPIDATION REPORT REQUIRED PRIOR TO COMMENCEMENT OF ANY CIVIL WORKS.
11. ALL POWER CABLE CONDUITS TO BE BENTONITED.

AS-BUILT DRAWING

REFERENCE DRAWINGS	
SURVEY	343704
TRENCH CONDUIT BRACKETS	343532
CAT HOLE CROSS SECTION	297280
BENTONITE INJECTION / VENTING POINT CROSS SECTION	321933
TYP CONCRETE END JOINT BAY	362086

AMENDMENTS

A	ORIGINAL ISSUE	Job No.	WTE8041
		PROJECT No.	PR1776
B	DR'N	B.F.	
	CH'D	K.R.O.	
	DATE	25.10.10	
	JOB No.	WTE8041	
	DSM	K.R.O.	SHT 8 & 9 FEEDERS RELOCATED EITHER SIDE OF WATERMAIN SHT 10 FTB & CONDUIT SPACERS DELETED
C	DR'N	B.F.	
	CH'D	G.H.	
	DATE	07.02.11	
	JOB No.	WTE8041	
	DSM	G. Schafer	SHT 6 - REVISED TO RTA REQUIREMENTS
D	DR'N	B.F.	
	CH'D	G.H.	
	DATE	05.09.11	
	JOB No.	WTE8041	
	DSM	G. Schafer	LONGITUDINAL SECT UPDATED TO DRG 343704 REV A
E	DR'N	I.S.	
	CH'D	G.H.	
	DATE	16.11.11	
	JOB No.	WTE8041	
	DSM	G. Schafer	SHT 2 & 10 - REVISED: CONDUIT RE-ROUTED, UNDER BORE WORK DELETED, CAT HOLE RELOCATED, CH 15 WAS CH 0, CH 25 UNTIL CH 100 RELOCATED

© This drawing and the copyright therein is the property of Integral Energy and may not be copied, reproduced, distributed, loaned or used without the written consent of Integral Energy.

	ORIGINAL SCALE 1:5000	APPROVED	
DRAWN	B.F.		
DATE	06.01.10		
CH'D	G.F.		

DO NOT SCALE
DIMENSIONS IN MILLIMETRES

ENDEAVOUR ENERGY

WEST CASTLE HILL ZONE SUBSTATION TO
CHERITON ZONE SUBSTATION
132kV UG FEEDERS 21C
ROUTE PLAN

AUTHORISED
D. Asvestas / J. Broadhead

MGR TRANSMISSION CAPITAL PROJECTS | 11.10.2012

A1 | 342140 | F

SHEET No 1 OF 10 SHEETS

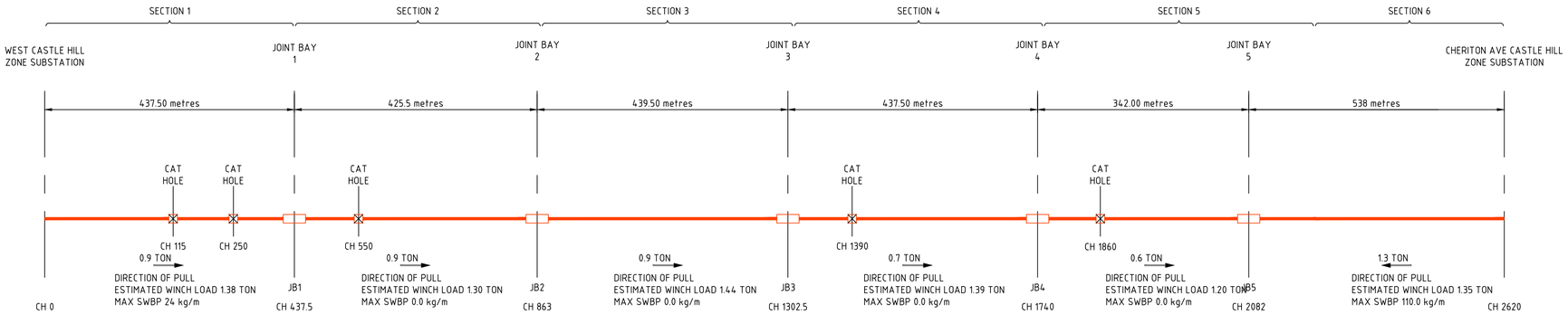

CABLE PULLING TENSION
JOINT BAY AND CAT HOLE POSITIONS

Scale N.T.S.

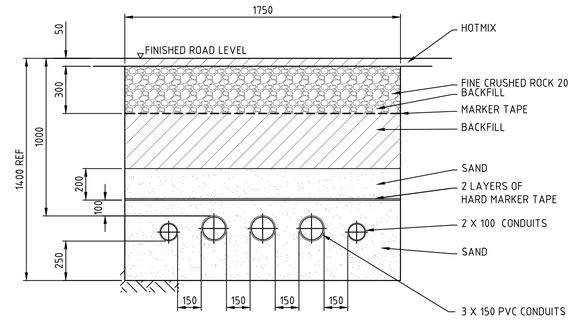

SECTION G-G
TRENCH AT JOINT BAY & CAT HOLE

SCALE 1:20

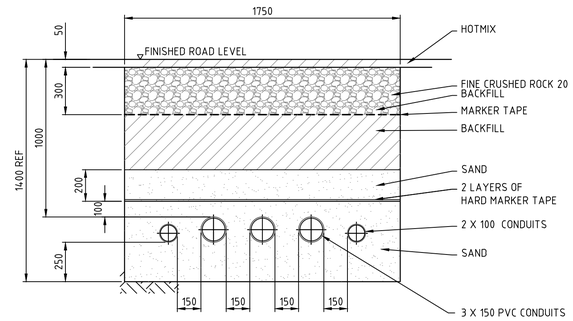

SECTION H-H
TRENCH AT JOINT BAY & CAT HOLE

SCALE 1:20

CABLE SCHEDULE						
SECTION	DRUM No.	CABLE LENGTH metres	DRUM WEIGHT kg	PROPOSED DELIVERY SCHEDULE	DRUM DELIVERY LOCATION	REMARKS
1		467			WEST CASTLE HILL Z.S.	-
2		445			JOINT BAY 1	-
3		460			JOINT BAY 2	-
4		457			JOINT BAY 3	-
5		362			JOINT BAY 4	-
6		556			CHERITON Z.S.	-

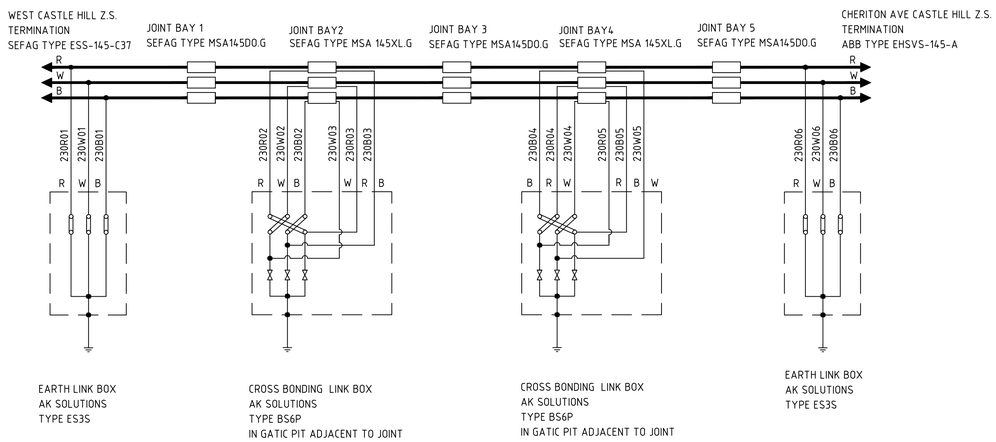

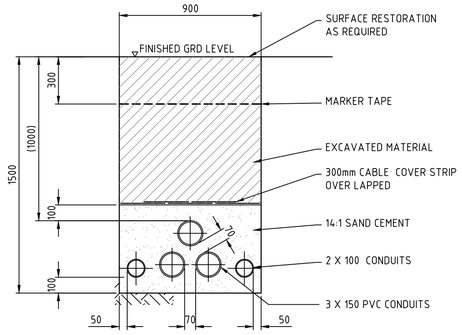

SECTION D-D
SCALE 1:20

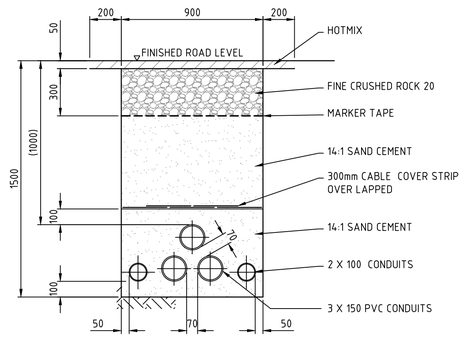

SECTION F-F
TYPICAL TRENCH

SCALE 1:20

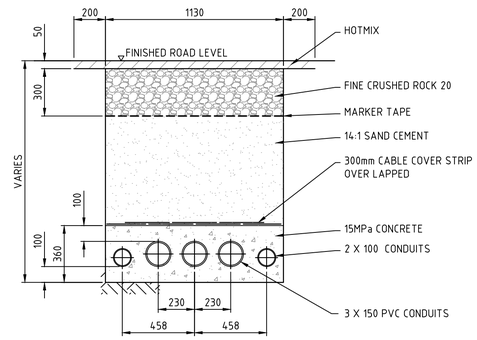

SECTION J-J
CONDUITS LAYED IN FLAT FORMATION OVER OTHER SERVICES

SCALE 1:20

132kV FEEDER CABLE BONDING SYSTEM - BOND CABLE LABEL NUMBERS																		
FEEDER	WEST CASTLE HILL Z.S.			JOINT BAY 2						JOINT BAY 4						CHERITON AVE CASTLE HILL Z.S.		
				WEST CASTLE HILL Z.S. END			CHERITON AVE Z.S. END			WEST CASTLE HILL Z.S. END			CHERITON AVE Z.S. END					
132kV FEEDER 21C	RED	WHITE	BLUE	RED	WHITE	BLUE	RED	WHITE	BLUE	RED	WHITE	BLUE	RED	WHITE	BLUE	RED	WHITE	BLUE
	21CR01	21CW01	21CB01	21CR02	21CW02	21CB02	21CR03	21CW03	21CB03	21CR04	21CW04	21CB04	21CR05	21CW05	21CB05	21CR06	21CW06	21CB06

JOINT BAY & EARTHING DETAIL
SCALE N.T.S.

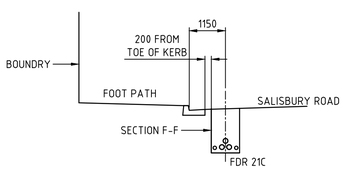

SECTION A-A
SCALE 1:100

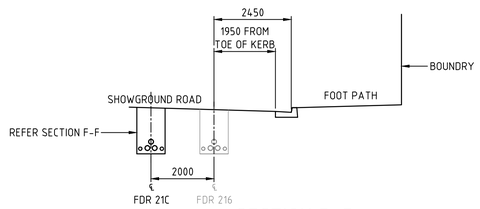

SECTION B-B
SCALE 1:100

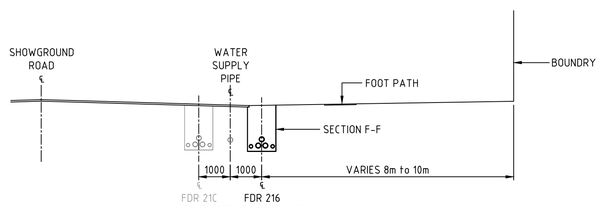

SECTION C-C
SCALE 1:100

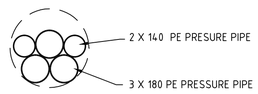

SECTION E-E
UNDER BORE

SCALE 1:20

AS-BUILT DRAWING

AMENDMENTS

A	ORIGINAL ISSUE	Job No. WTE8041 PROJECT No. PR1176
B	DRN B.F. CHD K.R.O. DATE 25.10.10 JOB No. WTE8041	DSM K.R.O. SHT 8 & 9 FEEDERS RELOCATED EITHER SIDE OF WATERMAIN SHT 10 F1B & CONDUIT SPACERS DELETED
C	DRN B.F. CHD G.H. DATE 09.08.11 JOB No. WTE8041	DSM G. Schafer SHT 6- REVISED TO RTA REQUIREMENTS
D	DRN B.F. CHD G.H. DATE 05.09.11 JOB No. WTE8041	DSM G. Schafer LONGITUDINAL SECT UPDATED TO DRG 34-3704 REV A
E	DRN I.S. CHD G.H. DATE 16.11.11 JOB No. WTE8041	DSM G. Schafer SHT 2 & 10 - REVISED: CONDUIT RE-ROUTED, UNDER BORE WORK DELETED, CAT HOLE RELOCATED, CH 15 WAS CH 0, CH 25 UNTIL CH 100 RELOCATED

© This drawing and the copyright therein is the property of Integral Energy and may not be copied, reproduced, distributed, loaned or used without the written consent of Integral Energy.

	ORIGINAL SCALE AS SHOWN	APPROVED
DRAWN	B.F.	
DATE	06.01.10	
CH'D	G.F.	

DO NOT SCALE
DIMENSIONS IN MILLIMETRES

REFERENCE DRAWINGS

ENDEAVOUR ENERGY

WEST CASTLE HILL ZONE SUBSTATION TO CHERITON ZONE SUBSTATION
132kV UG FEEDERS 21C
SECTIONS & DETAILS

AUTHORISED
D. Asvestas / J. Broadhead

MGR TRANSMISSION CAPITAL PROJECTS 11.10.2012

A1 342140 F

SHEET No 10 OF 10 SHEETS

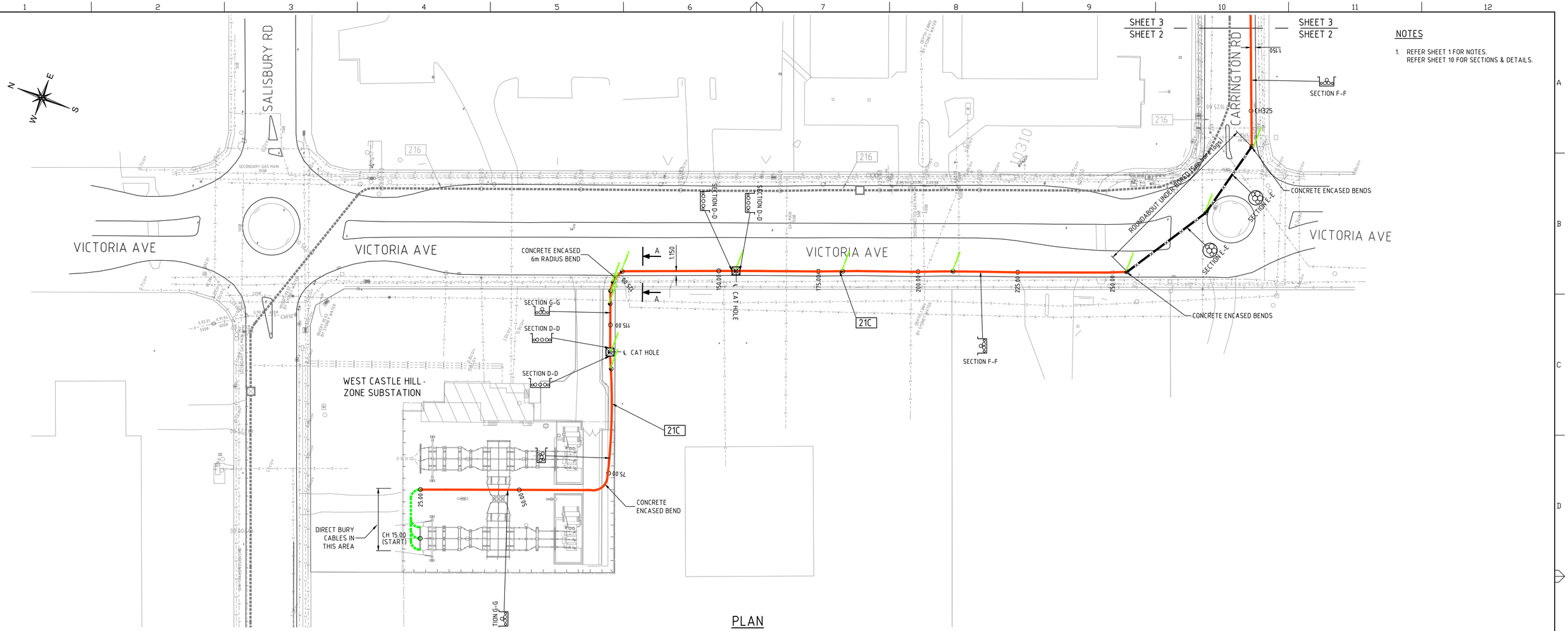

PLAN

SCALE 1:500

NOTES

1. REFER SHEET 1 FOR NOTES.
   REFER SHEET 10 FOR SECTIONS & DETAILS.

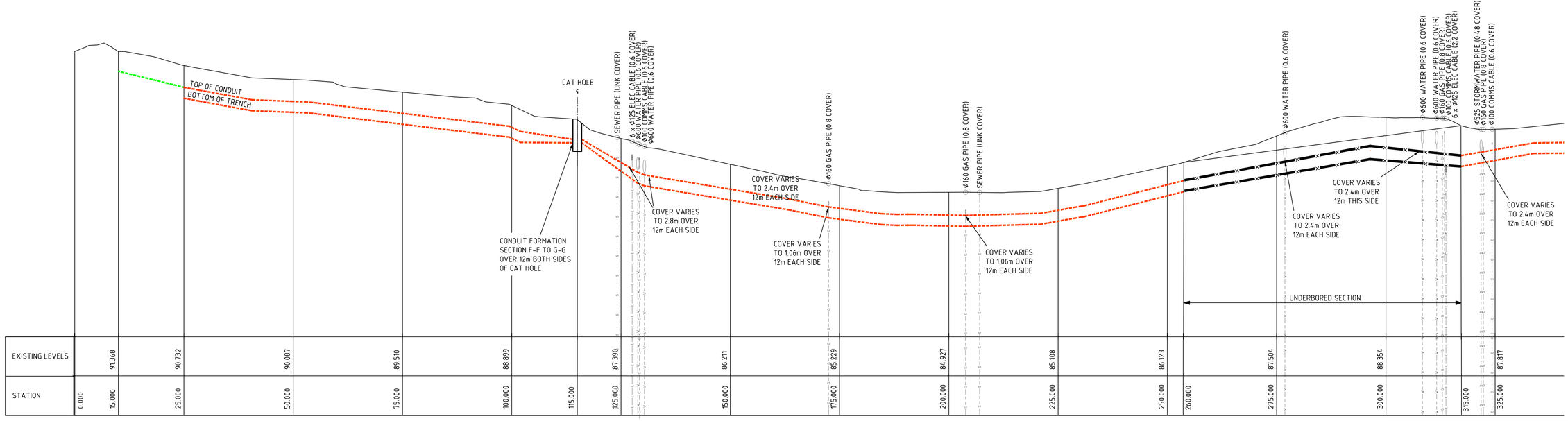

STATION	EXISTING LEVELS
0.000	
15.000	91.368
25.000	90.732
50.000	90.087
75.000	89.510
100.000	88.899
115.000	
125.000	87.390
150.000	86.211
175.000	85.229
200.000	84.927
225.000	85.108
250.000	86.123
260.000	
275.000	87.504
300.000	88.354
315.000	
325.000	87.817

LONGITUDINAL SECTION

SCALE HORIZONTAL 1:500
VERTICAL 1:100

AS-BUILT DRAWING

© This drawing and the copyright therein is the property of Integral Energy and may not be copied, reproduced, distributed, loaned or used without the written consent of Integral Energy.

DO NOT SCALE
DIMENSIONS IN MILLIMETRES

REFERENCE DRAWINGS

	ORIGINAL SCALE 1:500	APPROVED
DRAWN	B.F.	
DATE	06.01.10	
CH'D	G.F.	

ENDEAVOUR ENERGY

WEST CASTLE HILL ZONE SUBSTATION TO CHERITON ZONE SUBSTATION
132kV UG FEEDERS 21C
PLAN & PROFILE

AUTHORISED
D. Asvestas / J. Broadhead
MGR TRANSMISSION CAPITAL PROJECTS 11/10/2012

A1 342140 F
SHEET No 2 OF 10 SHEETS

AMENDMENTS

A	ORIGINAL ISSUE	Job No. WTE8041	PROJECT No. PR1776
B	DR'N B.F. CH'D K.R.O. DATE 25.10.10	JOB No. WTE8041	DSM K.R.O. SHT 8 & 9 FEEDERS RELOCATED EITHER SIDE OF WATERMAIN SHT 10 F1B & CONDUIT SPACERS DELETED
C	DR'N B.F. CH'D G.H. DATE 09.08.11	JOB No. WTE8041	DSM G. Schafer SHT 6 - REVISED TO RTA REQUIREMENTS
D	DR'N B.F. CH'D G.H. DATE 05.09.11	JOB No. WTE8041	DSM G. Schafer LONGITUDINAL SECT UPDATED TO DRG 343704 REV A
E	DR'N I.S. CH'D G.H. DATE 16.11.11	JOB No. WTE8041	DSM G. Schafer SHT 2 & 10 - REVISED; CONDUIT RE-ROUTED, UNDER BORE WORK DELETED, CAT HOLE RELOCATED, CH 15 WAS CH 0, CH 25 UNTIL CH 100 RELOCATED

NOTES

1. REFER SHEET 1 FOR NOTES.
   REFER SHEET 10 FOR SECTIONS & DETAILS.

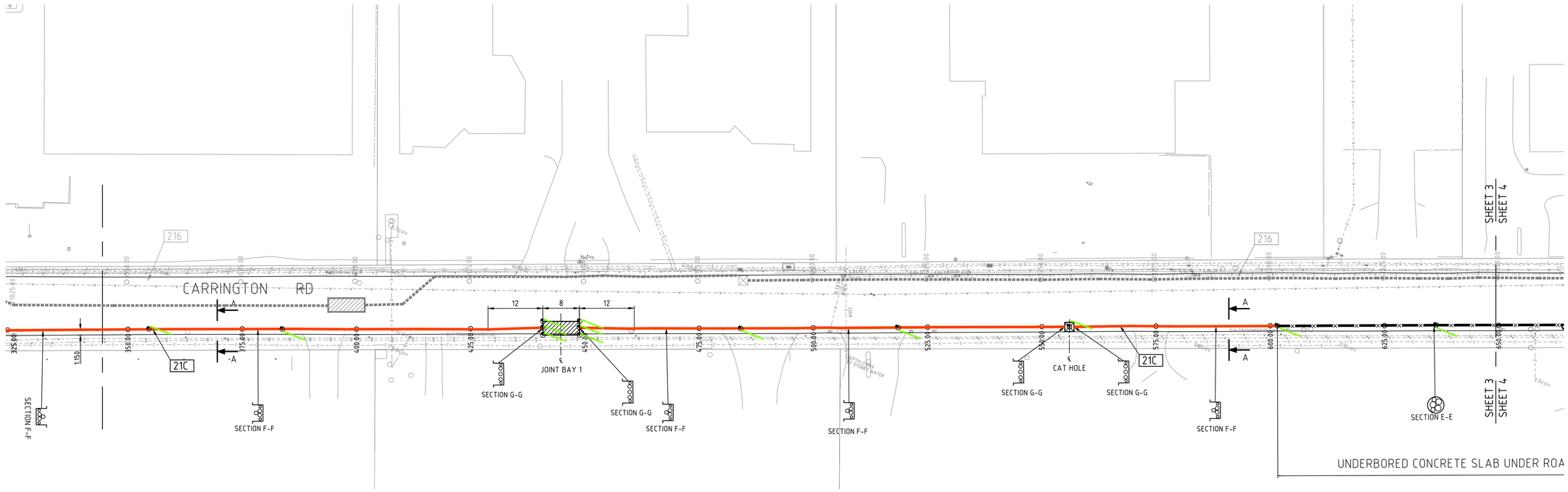

PLAN

SCALE 1:500

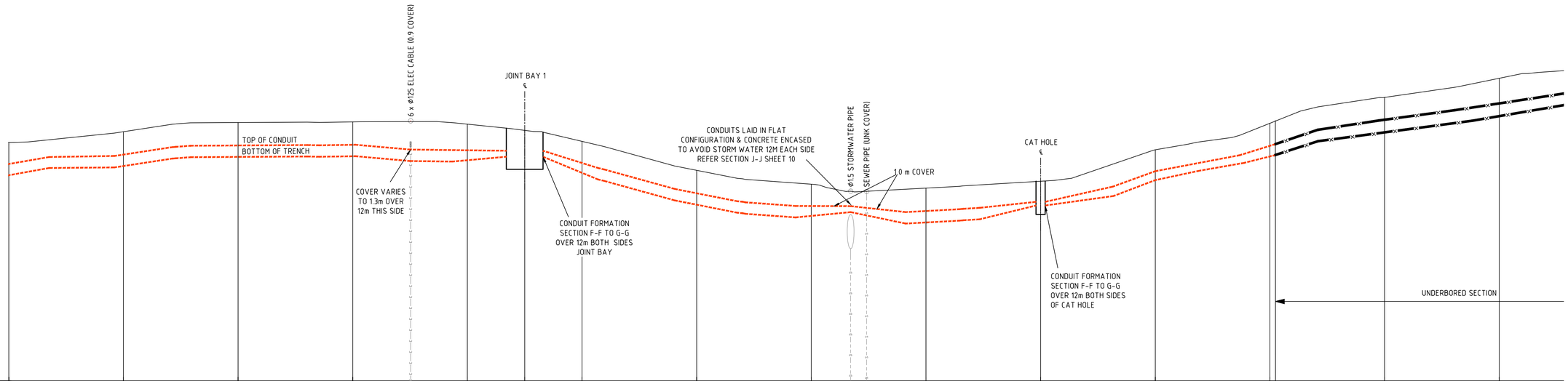

STATION	EXISTING LEVELS
325.000	87.817
350.000	88.290
375.000	88.689
400.000	88.718
425.000	88.617
437.500	
450.000	87.868
475.000	86.603
500.000	85.998
525.000	85.679
550.000	86.128
575.000	87.498
600.000	88.658
602.000	
625.000	89.788
650.000	90.620

AS-BUILT DRAWING

LONGITUDINAL SECTION

SCALE HORIZONTAL 1:500
VERTICAL 1:100

© This drawing and the copyright therein is the property of Integral Energy and may not be copied, reproduced, distributed, loaned or used without the written consent of Integral Energy.

DO NOT SCALE
DIMENSIONS IN MILLIMETRES

REFERENCE DRAWINGS

	ORIGINAL SCALE 1:500	APPROVED
DRAWN	B.F.	
DATE	06.01.10	
CH'D	G.F.	

ENDEAVOUR ENERGY

WEST CASTLE HILL ZONE SUBSTATION TO
CHERITON ZONE SUBSTATION
132kV UG FEEDERS 21C
PLAN & PROFILE

AUTHORISED
D. Asvestas / J. Broadhead

MGR TRANSMISSION CAPITAL PROJECTS 11/10/2012

A1 342140 F

SHEET No 3 OF 10 SHEETS

AMENDMENTS

A	ORIGINAL ISSUE Job No. WTE8041 PROJECT No. PR7176	
B	DR'N B.F. CH'D K.R.O. DATE 25.10.10 JOB No. WTE8041 DSM K.R.O.	SHT 8 & 9 FEEDERS RELOCATED EITHER SIDE OF WATERMAIN SHT 10 F1B & CONDUIT SPACERS DELETED
C	DR'N B.F. CH'D G.H. DATE 09.08.11 JOB No. WTE8041 DSM G. Schafer	SHT 6 - REVISED TO RTA REQUIREMENTS
D	DR'N B.F. CH'D G.H. DATE 05.09.11 JOB No. WTE8041 DSM G. Schafer	LONGITUDINAL SECT UPDATED TO DRG 343704 REV A
E	DR'N I.S. CH'D G.H. DATE 16.11.11 JOB No. WTE8041 DSM G. Schafer	SHT 2 & 10 - REVISED: CONDUIT RE-ROUTED, UNDER BORE WORK DELETED, CAT HOLE RELOCATED, CH 15 WAS CH 0, CH 25 UNTIL CH 100 RELOCATED

NOTES

1. REFER SHEET 1 FOR NOTES.
   REFER SHEET 10 FOR SECTIONS & DETAILS.

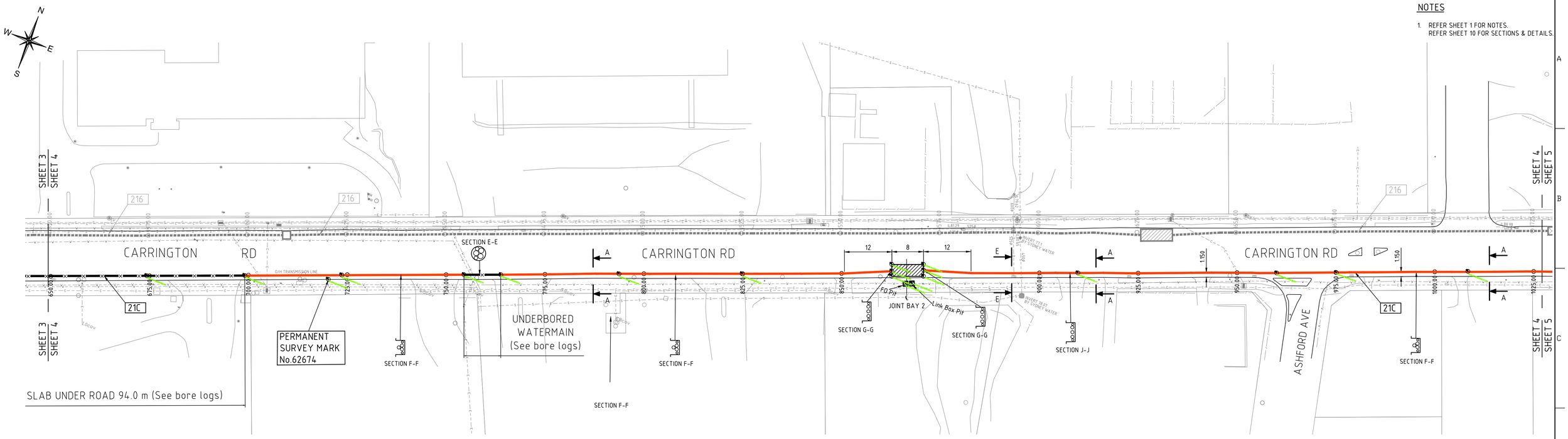

PLAN

SCALE 1:500

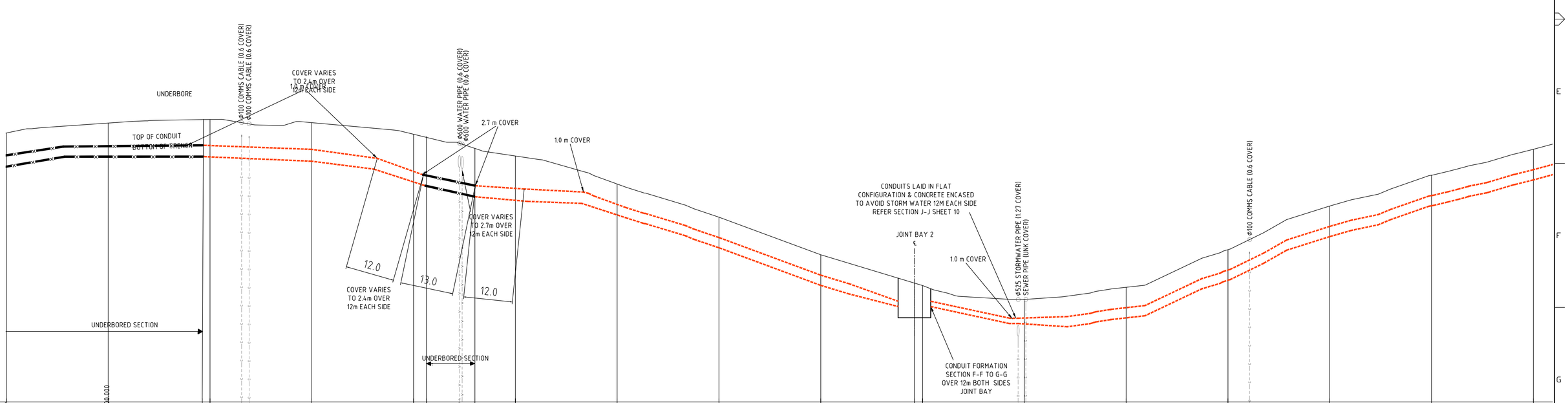

EXISTING LEVELS	90.620	91.104		91.283	91.126	90.559		89.490	88.115	86.488	84.642	83.133		82.451	82.502	84.893	87.036	88.547	89.816
STATION	650.000	675.000	600.000	700.000	725.000	750.000	754.000	763.000	775.000	800.000	825.000	850.000	863.000	875.000	900.000	925.000	950.000	975.000	1000.000	1025.000

AS-BUILT DRAWING

LONGITUDINAL SECTION

SCALE HORIZONTAL 1:500
VERTICAL 1:100

AMENDMENTS

A	ORIGINAL ISSUE Job No. WTE8041 PROJECT No. PR1716	
B	DR'N B.F. CH'D K.R.O. DATE 25.10.10 JOB No. WTE8041 DSM G. Schafer	SHT 8 & 9 FEEDERS RELOCATED EITHER SIDE OF WATERMAIN SHT 10 FTB & CONDUIT SPACERS DELETED
C	DR'N B.F. CH'D G.H. DATE 09.08.11 JOB No. WTE8041 DSM G. Schafer	SHT 6 - REVISED TO RTA REQUIREMENTS
D	DR'N B.F. CH'D G.H. DATE 05.09.11 JOB No. WTE8041 DSM G. Schafer	LONGITUDINAL SECT UPDATED TO DRG 343704 REV A
E	DR'N I.S. CH'D G.H. DATE 16.11.11 JOB No. WTE8041 DSM G. Schafer	SHT 2 & 10 - REVISED: CONDUIT RE-ROUTED, UNDER BORE WORK DELETED, CAT HOLE RELOCATED, CH 15 WAS CH 0, CH 25 UNTIL CH 100 RELOCATED

© This drawing and the copyright therein is the property of Integral Energy and may not be copied, reproduced, distributed, loaned or used without the written consent of Integral Energy.

	ORIGINAL SCALE 1:500	APPROVED
DRAWN	B.F.	
DATE	06.01.10	
CH'D	G.F.	

DO NOT SCALE
DIMENSIONS IN MILLIMETRES

REFERENCE DRAWINGS

ENDEAVOUR ENERGY

WEST CASTLE HILL ZONE SUBSTATION TO
CHERITON AVE ZONE SUBSTATION
132kV UG FEEDERS 21C
PLAN & PROFILE

AUTHORISED
D. Asvestas / J. Broadhead

MGR TRANSMISSION CAPITAL PROJECTS 11.10.2012

A1 342140 F

SHEET No 4 OF 10 SHEETS

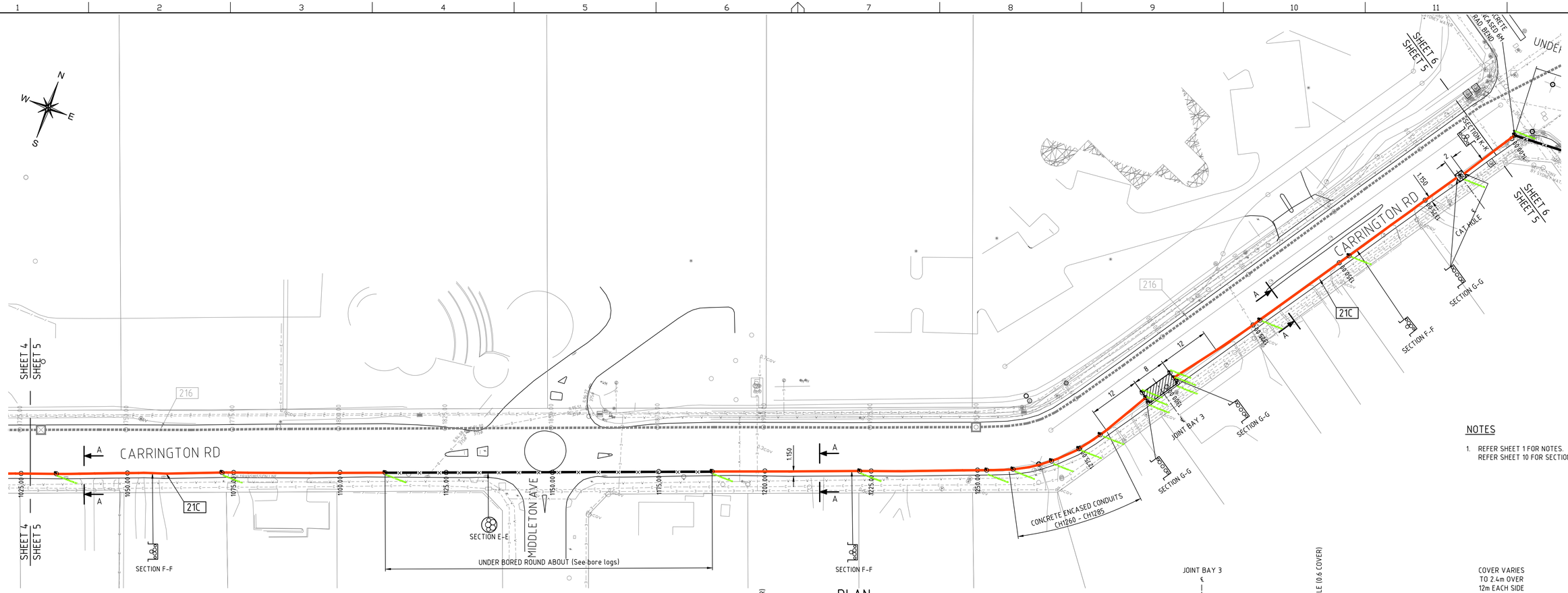

PLAN

SCALE 1:500

NOTES

1. REFER SHEET 1 FOR NOTES.
   REFER SHEET 10 FOR SECTIONS & DETAILS.

COVER VARIES
TO 2.4m OVER
12m EACH SIDE

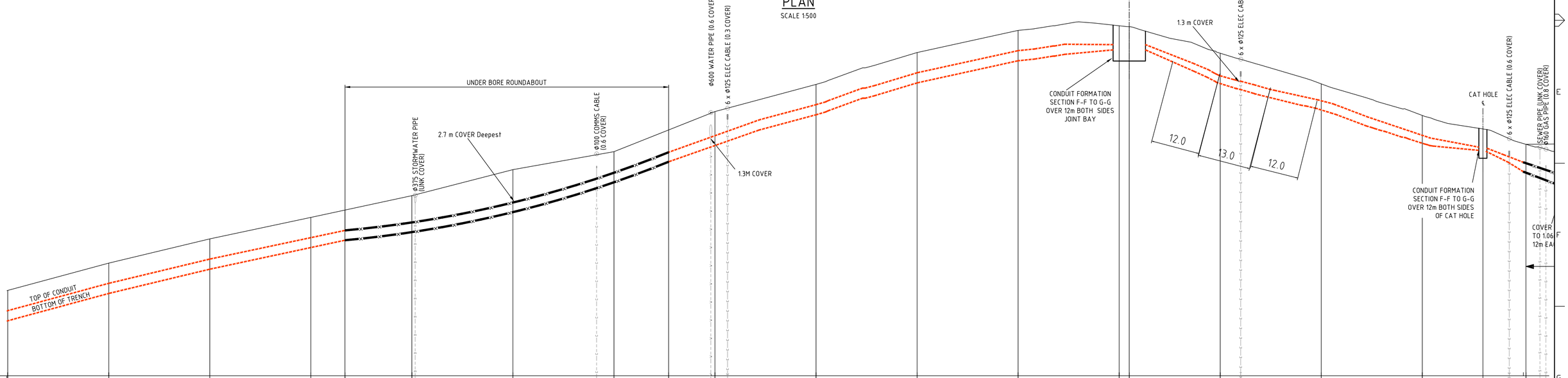

STATION	EXISTING LEVELS
1025.000	89.816
1050.000	91.167
1075.000	92.367
1100.000	93.426
1110.000	
1125.000	94.503
1150.000	95.789
1175.000	96.680
1183.000	
1200.000	98.664
1225.000	100.003
1250.000	101.580
1275.000	102.674
1300.000	102.903
1302.500	
1325.000	101.546
1350.000	100.033
1375.000	98.470
1390.000	
1400.000	97.081

AS-BUILT DRAWING

LONGITUDINAL SECTION

SCALE HORIZONTAL 1:500
VERTICAL 1:100

© This drawing and the copyright therein is the property of Integral Energy and may not be copied, reproduced, distributed, loaned or used without the written consent of Integral Energy.

DO NOT SCALE
DIMENSIONS
IN MILLIMETRES

REFERENCE DRAWINGS

	ORIGINAL SCALE 1:500	APPROVED	
DRAWN	B.F.		
DATE	06.01.10		
CH'D	G.F.		

ENDEAVOUR ENERGY

WEST CASTLE HILL ZONE SUBSTATION TO
CHERITON ZONE SUBSTATION
132kV UG FEEDERS 21C
PLAN & PROFILE

AUTHORISED
D. Asvestas / J. Broadhead

MGR TRANSMISSION CAPITAL PROJECTS 11.10.2012

A1 342140 F

SHEET No 5 OF 10 SHEETS

AMENDMENTS

A	ORIGINAL ISSUE	Job No WTE8041	PROJECT No PR1176
B	DR'N B.F. CH'D K.R.O. DATE 25.10.10	JOB No WTE8041	DSM K.R.O. SHT 8 & 9 FEEDERS RELOCATED EITHER SIDE OF WATERMAIN SHT 10 FTB & CONDUIT SPACERS DELETED
C	DR'N B.F. CH'D G.H. DATE 09.08.11	JOB No WTE8041	DSM G. Schafer SHT 6 - REVISED TO RTA REQUIREMENTS
D	DR'N B.F. CH'D G.H. DATE 05.09.11	JOB No WTE8041	DSM G. Schafer LONGITUDINAL SECT UPDATED TO DRG 343704 REV A
E	DR'N I.S. CH'D G.H. DATE 16.11.11	JOB No WTE8041	DSM G. Schafer SHT 2 & 10 - REVISED. CONDUIT RE-ROUTED, UNDER BORE WORK DELETED, CAT HOLE RELOCATED, CH 15 WAS CH 0, CH 25 UNTIL CH 100 RELOCATED

PLAN

SCALE 1:500

NOTES

1. REFER SHEET 1 FOR NOTES.
   REFER SHEET 10 FOR SECTIONS & DETAILS.

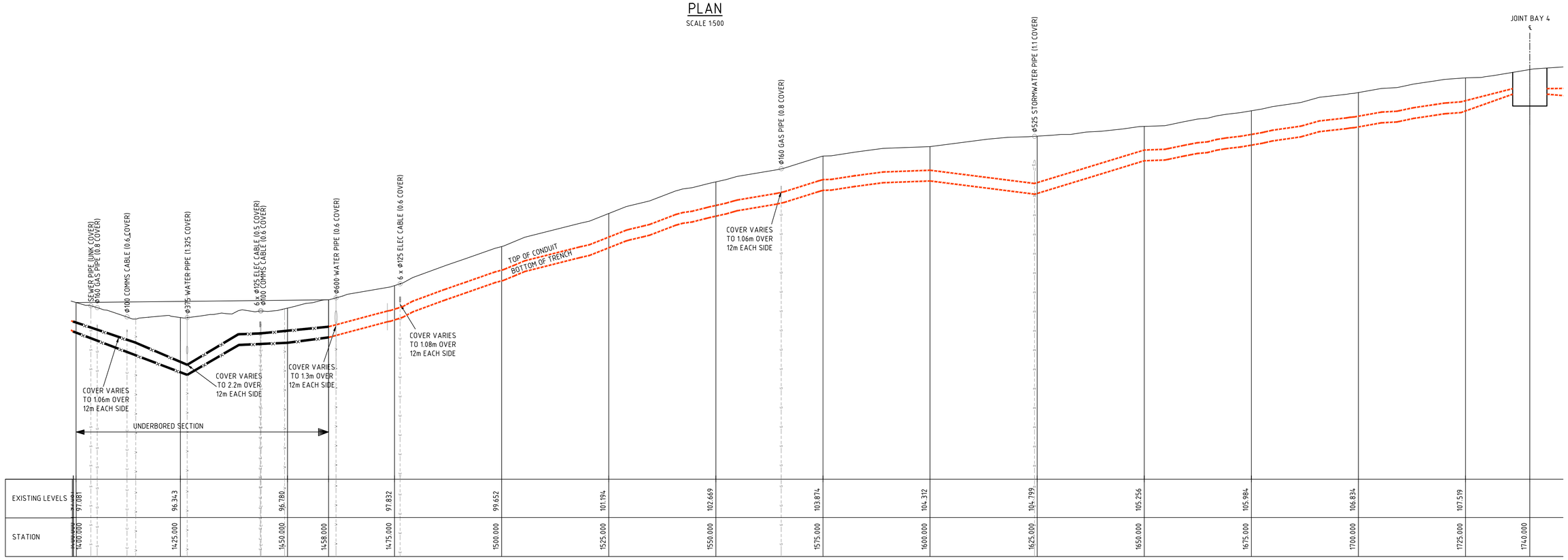

LONGITUDINAL SECTION

SCALE HORIZONTAL 1:500
VERTICAL 1:100

AS-BUILT DRAWING

AMENDMENTS		
A	ORIGINAL ISSUE	Job No. WTE8041
PROJECT No. PR176		
B	DR'N B.F. / CH'D K.R.O. / DATE 25.10.10	JOB No. WTE8041
DSM K.R.O.	SHT 8 & 9 FEEDERS RELOCATED EITHER SIDE OF WATERMAIN SHT 10 FTB & CONDUIT SPACERS DELETED	
C	DR'N B.F. / CH'D G.H. / DATE 09.08.11	JOB No. WTE8041
DSM G. Schafer	SHT 6 - REVISED TO RTA REQUIREMENTS	
D	DR'N B.F. / CH'D G.H. / DATE 05.09.11	JOB No. WTE8041
DSM G. Schafer	LONGITUDINAL SECT UPDATED TO DRG 343704 REV A	
E	DR'N I.S. / CH'D G.H. / DATE 16.11.11	JOB No. WTE8041
DSM G. Schafer	SHT 2 & 10 - REVISED: CONDUIT RE-ROUTED, UNDER BORE WORK DELETED, CAT HOLE RELOCATED, CH 15 WAS CH 0, CH 25 UNTIL CH 100 RELOCATED	

© This drawing and the copyright therein is the property of Integral Energy and may not be copied, reproduced, distributed, loaned or used without the written consent of Integral Energy.

DO NOT SCALE
DIMENSIONS IN MILLIMETRES

REFERENCE DRAWINGS

	ORIGINAL SCALE 1:500	APPROVED
DRAWN	B.F.	
DATE	06.01.10	
CH'D	G.F.	

ENDEAVOUR ENERGY

WEST CASTLE HILL ZONE SUBSTATION TO
CHERITON ZONE SUBSTATION
132kV UG FEEDERS 21C
PLAN & PROFILE

AUTHORISED
D. Asvestas / J. Broadhead

MGR TRANSMISSION CAPITAL PROJECTS 11.10.2012

A1 342140 F

SHEET No 6 OF 10 SHEETS

NOTES

1. REFER SHEET 1 FOR NOTES.
   REFER SHEET 10 FOR SECTIONS & DETAILS.

PLAN

SCALE 1:500

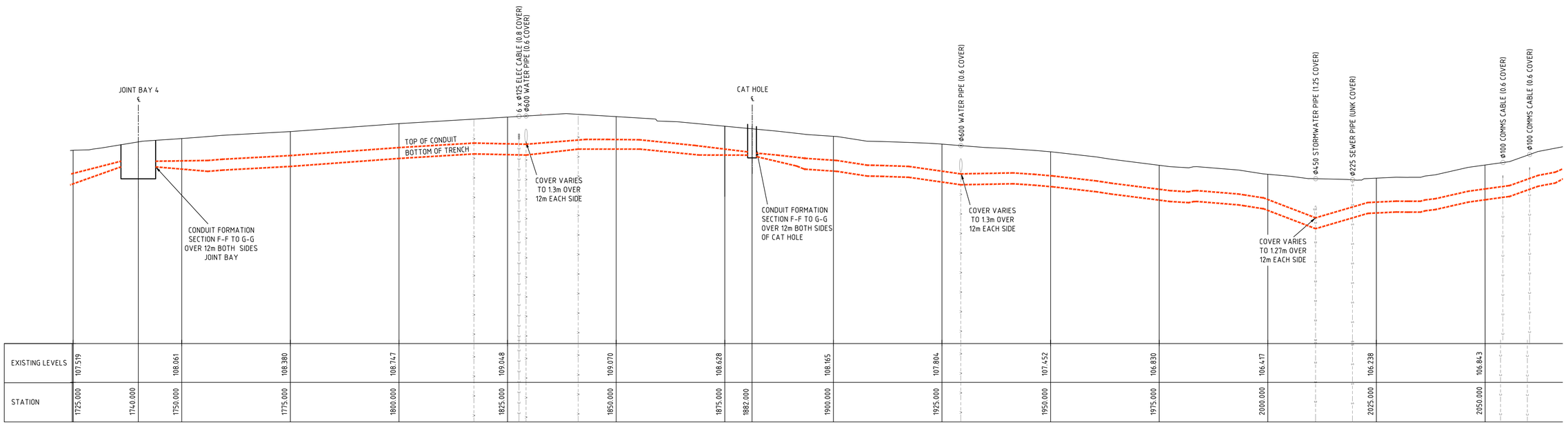

EXISTING LEVELS	107.519		108.061		108.380		108.747		109.048		109.070		108.628		108.165		107.804		107.452		106.830		106.417		106.238		106.843		
STATION	1725.000	1740.000	1750.000		1775.000		1800.000		1825.000		1850.000		1875.000	1882.000	1900.000		1925.000		1950.000		1975.000		2000.000		2025.000		2050.000		

AS-BUILT DRAWING

LONGITUDINAL SECTION

SCALE HORIZONTAL 1:500
VERTICAL 1:100

© This drawing and the copyright therein is the property of Integral Energy and may not be copied, reproduced, distributed, loaned or used without the written consent of Integral Energy.

DO NOT SCALE
DIMENSIONS IN MILLIMETRES

REFERENCE DRAWINGS

	ORIGINAL SCALE 1:500	APPROVED
DRAWN	B.F.	
DATE	06.01.10	
CH'D	G.F.	

ENDEAVOUR ENERGY

WEST CASTLE HILL ZONE SUBSTATION TO
CHERITON ZONE SUBSTATION
132kV UG FEEDERS 21C
PLAN & PROFILE

AUTHORISED
D. Asvestas / J. Broadhead

MGR TRANSMISSION CAPITAL PROJECTS 11.10.2012

A1 342140 F

SHEET No 7 OF 10 SHEETS

AMENDMENTS

A	ORIGINAL ISSUE	Job No. WTE8041
	PROJECT No. PR1716	
B	DR'N B.F. CH'D K.R.O. DATE 25.10.10	JOB No. WTE8041
	DSM K.R.O.	SHT 8 & 9 FEEDERS RELOCATED EITHER SIDE OF WATERMAIN SHT 10 FTB & CONDUIT SPACERS DELETED
C	DR'N B.F. CH'D G.H. DATE 09.08.11	JOB No. WTE8041
	DSM G. Schafer	SHT 6 - REVISED TO RTA REQUIREMENTS
D	DR'N B.F. CH'D G.H. DATE 05.09.11	JOB No. WTE8041
	DSM G. Schafer	LONGITUDINAL SECT UPDATED TO DRG 343704 REV A
E	DR'N I.S. CH'D G.H. DATE 16.11.11	JOB No. WTE8041
	DSM G. Schafer	SHT 2 & 10 - REVISED: CONDUIT RE-ROUTED, UNDER BORE WORK DELETED, CAT HOLE RELOCATED, CH 15 WAS CH 0, CH 25 UNTIL CH 100 RELOCATED

NOTES

1. REFER SHEET 1 FOR NOTES.
   REFER SHEET 10 FOR SECTIONS & DETAILS.

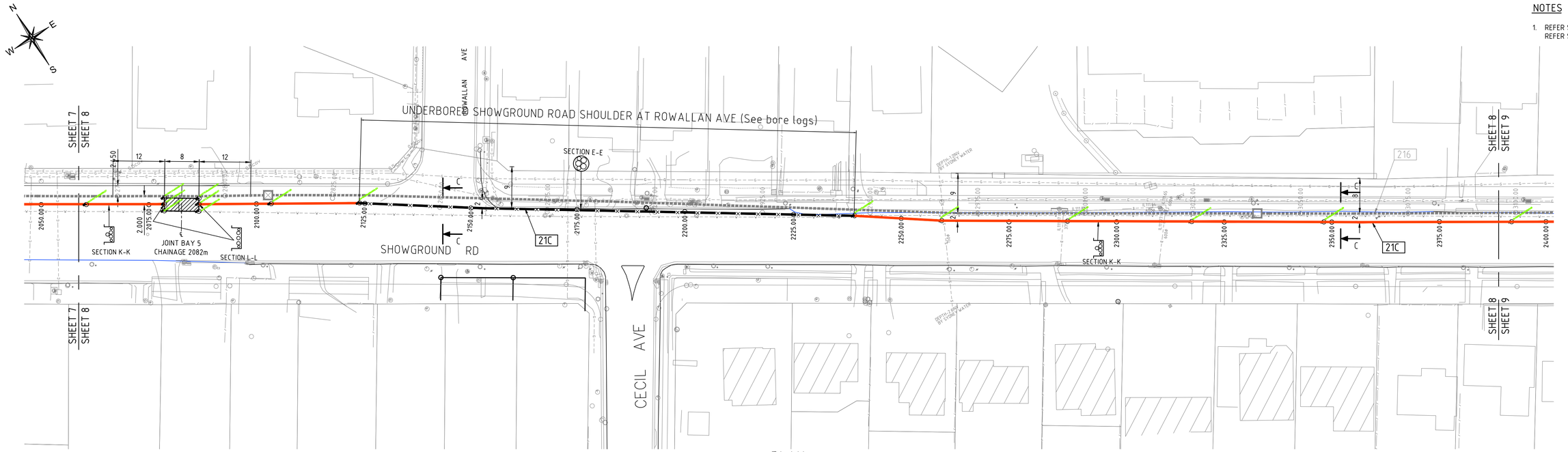

PLAN

SCALE 1:500

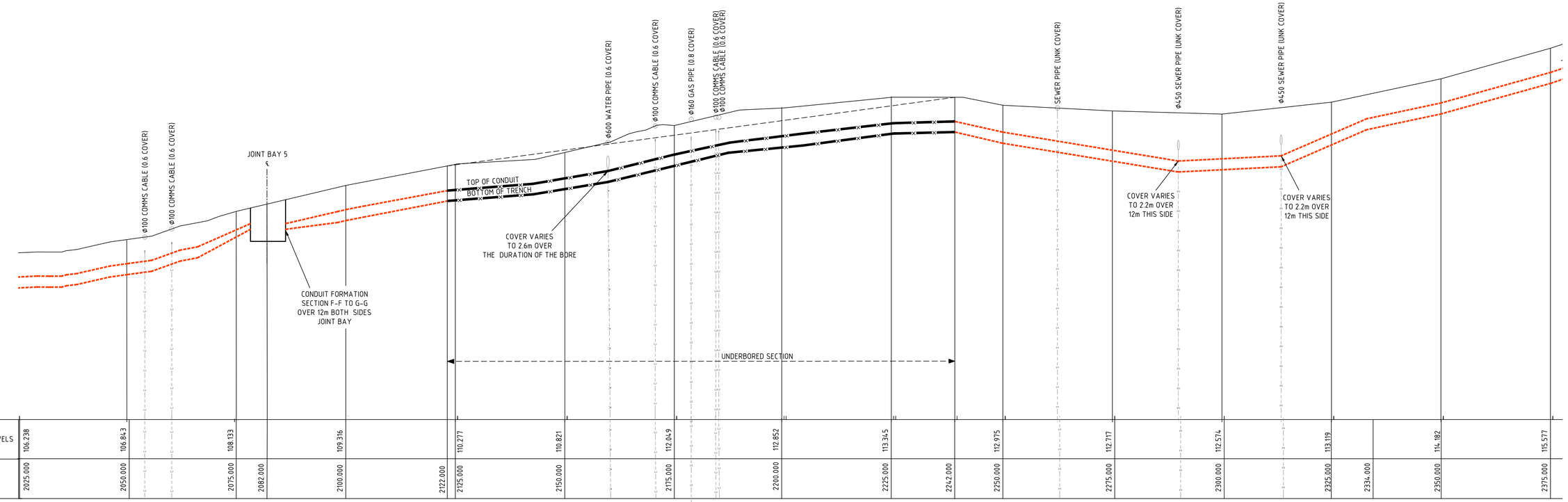

EXISTING LEVELS	106.238	106.843	108.133	109.316	110.277	110.821	112.049	112.852	113.345	112.975	112.717	112.574	113.119	114.182	115.577
STATION	2025.000	2050.000	2075.000	2082.000	2100.000	2122.000	2125.000	2150.000	2175.000	2200.000	2225.000	2242.000	2250.000	2275.000	2300.000	2325.000	2334.000	2350.000	2375.000

LONGITUDINAL SECTION

SCALE HORIZONTAL 1:500
VERTICAL 1:100

AS-BUILT DRAWING

AMENDMENTS

A	ORIGINAL ISSUE	Job No. WTE8041	PROJECT No. PR1716
B	DRN B.F. CHD K.R.O. DATE 25.10.10	JOB No. WTE8041	DSM K.R.O. SHT 8 & 9 FEEDERS RELOCATED EITHER SIDE OF WATERMAIN SHT 10 FTB & CONDUIT SPACERS DELETED
C	DRN B.F. CHD G.H. DATE 09.08.11	JOB No. WTE8041	DSM G. Schafer SHT 6 - REVISED TO RTA REQUIREMENTS
D	DRN B.F. CHD G.H. DATE 05.09.11	JOB No. WTE8041	DSM G. Schafer LONGITUDINAL SECT UPDATED TO DRG 343704 REV A
E	DRN I.S. CHD G.H. DATE 16.11.11	JOB No. WTE8041	DSM G. Schafer SHT 2 & 10 - REVISED: CONDUIT RE-ROUTED, UNDER BORE WORK DELETED, CAT HOLE RELOCATED, CH 15 WAS CH 0, CH 25 UNTIL CH 100 RELOCATED

© This drawing and the copyright therein is the property of Integral Energy and may not be copied, reproduced, distributed, loaned or used without the written consent of Integral Energy.

	ORIGINAL SCALE 1:500	APPROVED	
DRAWN	B.F.		
DATE	06.01.10		
CH'D	G.F.		

DO NOT SCALE
DIMENSIONS
IN MILLIMETRES

REFERENCE DRAWINGS

ENDEAVOUR ENERGY

WEST CASTLE HILL ZONE SUBSTATION TO
CHERITON ZONE SUBSTATION
132kV UG FEEDERS 21C
PLAN & PROFILE

AUTHORISED
D. Asvestas / J. Broadhead

MGR TRANSMISSION CAPITAL PROJECTS 11.10.2012

A1 342140 F

SHEET No 8 OF 10 SHEETS

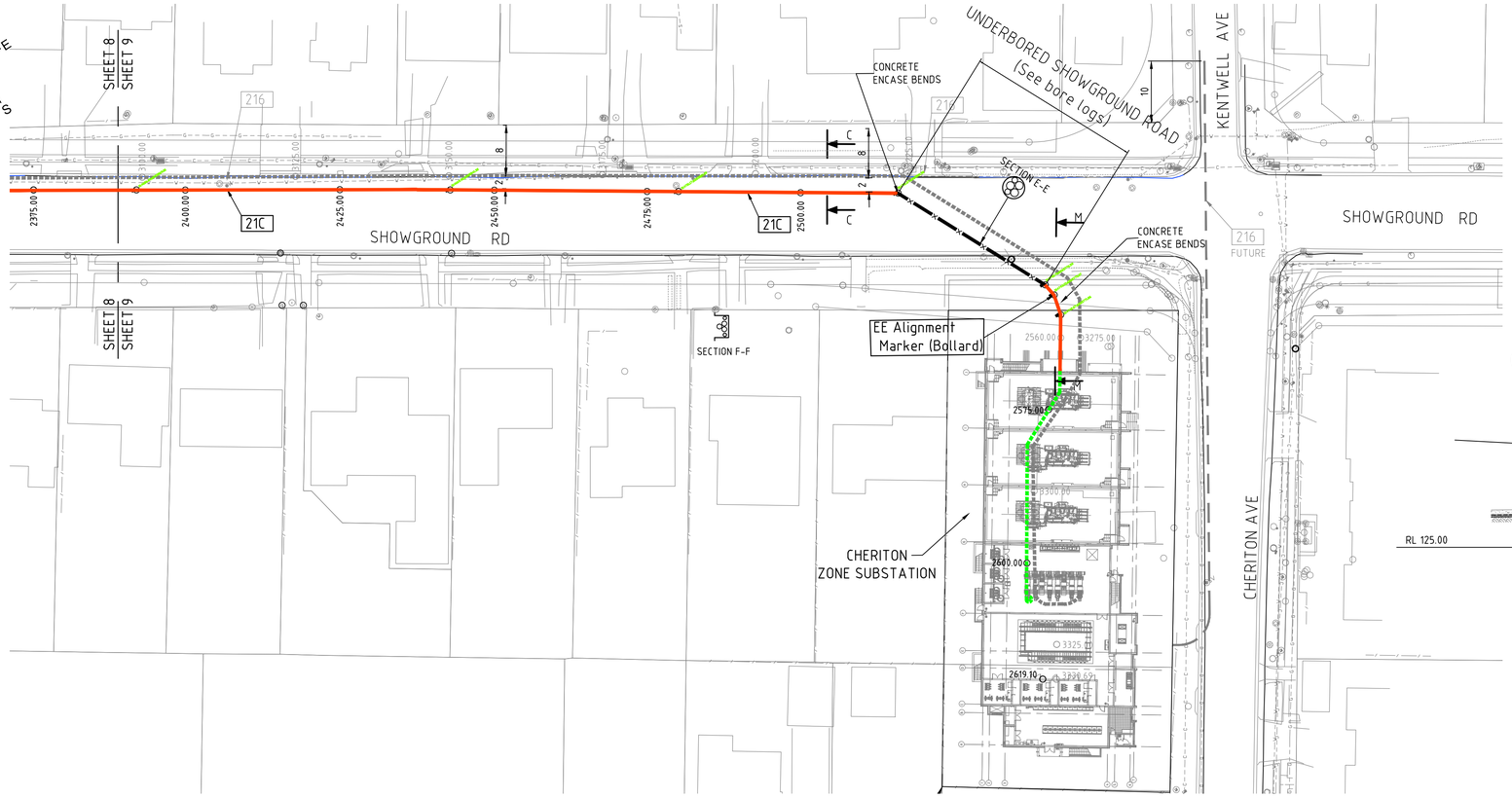

PLAN

SCALE 1:500

NOTES

1. REFER SHEET 1 FOR NOTES.
   REFER SHEET 10 FOR SECTIONS & DETAILS.

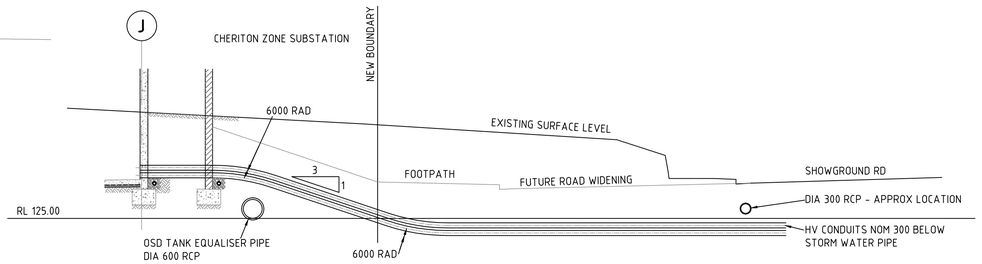

SECTION M-M

FEEDER 21C

SCALE 1:100

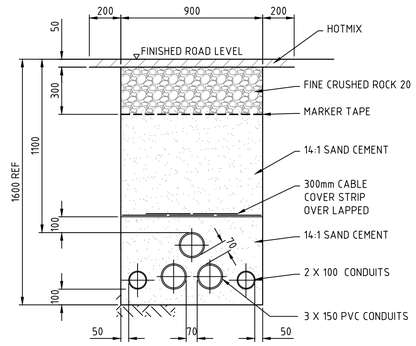

SECTION K-K

TYPICAL TRENCH - SHOWGROUND ROAD

SCALE 1:20

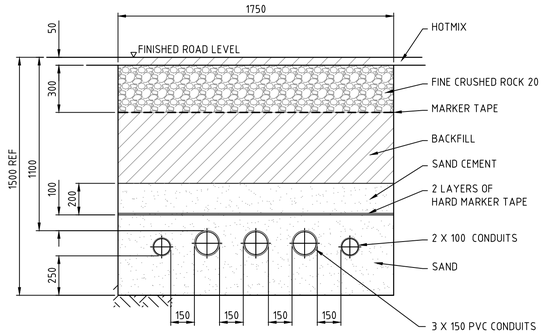

SECTION L-L

TRENCH AT JOINT BAY

SCALE 1:20

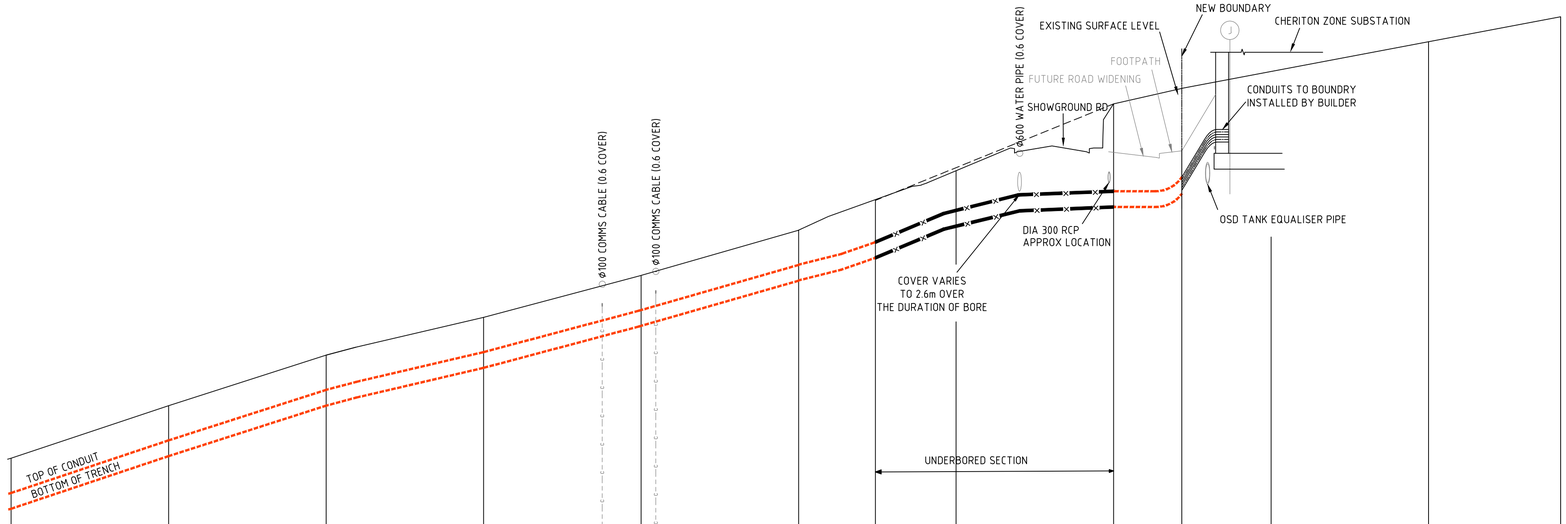

STATION	EXISTING LEVELS
2375.000	115.577
2400.000	117.247
2425.000	118.849
2450.000	120.049
2475.000	121.381
2500.000	122.815
2513.000	
2525.000	124.233
2550.000	125.293
2560.830	
2575.000	
2600.000	
2620.97	

LONGITUDINAL SECTION

SCALE HORIZONTAL 1:500
VERTICAL 1:100

AS-BUILT DRAWING

AMENDMENTS

A	ORIGINAL ISSUE	Job No WTE8041	
	PROJECT No. PR1176		
B	DR'N B.F. CH'D K.R.O. DATE 25.10.10 JOB No WTE8041	DSM G. Schafer	SHT 8 & 9 FEEDERS RELOCATED EITHER SIDE OF WATERMAIN SHT 10 FTB & CONDUIT SPACERS DELETED
C	DR'N B.F. CH'D G.H. DATE 09.08.11 JOB No WTE8041	DSM G. Schafer	SHT 6 - REVISED TO RTA REQUIREMENTS
D	DR'N B.F. CH'D G.H. DATE 05.09.11 JOB No WTE8041	DSM G. Schafer	LONGITUDINAL SECT UPDATED TO DRG 343704 REV A
E	DR'N I.S. CH'D G.H. DATE 16.11.11 JOB No WTE8041	DSM G. Schafer	SHT 2 & 10 - REVISED. CONDUIT RE-ROUTED, UNDER BORE WORK DELETED, CAT HOLE RELOCATED, CH:15 WAS CH:0, CH 25 UNTIL CH:100 RELOCATED

© This drawing and the copyright therein is the property of Integral Energy and may not be copied, reproduced, distributed, loaned or used without the written consent of Integral Energy.

DO NOT SCALE
DIMENSIONS IN MILLIMETRES

REFERENCE DRAWINGS

	ORIGINAL SCALE 1:500	APPROVED
DRAWN	B.F.	
DATE	06.01.10	
CH'D	G.F.	

ENDEAVOUR ENERGY

WEST CASTLE HILL ZONE SUBSTATION TO
CHERITON ZONE SUBSTATION
132kV UG FEEDERS 21C
PLAN & PROFILE

AUTHORISED
D. Asvestas / J. Broadhead
MGR TRANSMISSION CAPITAL PROJECTS 11.10.2012

A1 342140 F

SHEET No 9 OF 10 SHEETS