M10-735

EP POINT MACHINE ON 60KG TANGENTIAL TURNOUT SPHEROLOCK IN FRONT BEARER BACKDRIVE STRETCHER BAR IN REAR INBEARER

Revision No 3

Issued February 2011

Owner: Chief Engineer Signals and Control Systems

Approved by: Warwick Allison
Chief Engineer
Signals and Control Systems

Authorised by: Paul Szacsvay
Principal Engineer
Signalling Technology

Contents

Isometric view
M10-735 sheet 1 of 3 part 1
M10-735 sheet 1 of 3 part 2
M10-735 sheet 1 of 3 part 3
M10-735 sheet 1 of 3 part 4
M10-735 sheet 1 of 3 part 5
M10-735 sheet 2 of 3
M10-735 sheet 3 of 3
M10-735-1 sheet 1 of 2
M10-735-1 sheet 2 of 2

Disclaimer
This document was prepared for use on the RailCorp Network only.
RailCorp makes no warranties, express or implied, that compliance with the contents of this document shall be sufficient to ensure safe systems or work or operation. It is the document user's sole responsibility to ensure that the copy of the document it is viewing is the current version of the document as in use by RailCorp.
RailCorp accepts no liability whatsoever in relation to the use of this document by any party, and RailCorp excludes any liability which arises in any manner by the use of this document.
Copyright
The information in this document is protected by Copyright and no part of this document may be reproduced, altered, stored or transmitted by any person without the prior consent of RailCorp.

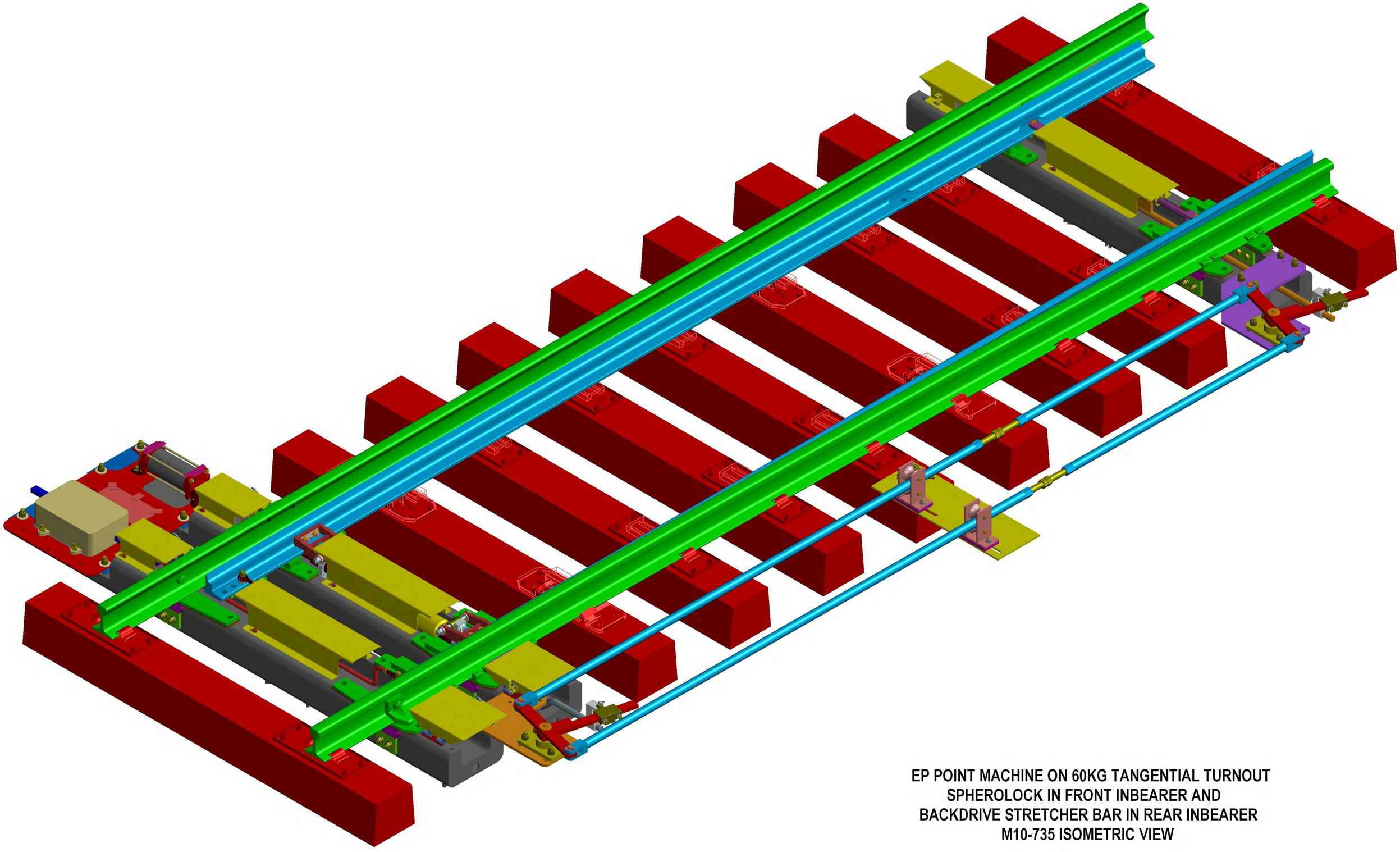

EP POINT MACHINE ON 60KG TANGENTIAL TURNOUT
SPHEROLOCK IN FRONT INBEARER AND
BACKDRIVE STRETCHER BAR IN REAR INBEARER
M10-735 ISOMETRIC VIEW

E.P. POINT MACHINE USED IN 60Kg TANGENTIAL TURNOUT

NOTE: THIS LAYOUT IS FOR USE WITH SCARFED INBEARER STEEL BEAMS AT THE "A" AND "B" LOCATIONS.
THE OPERATING ROD NEEDS TO TRAVEL 180mm. BLADE OPENING IS TO BE BETWEEN 125 AND 130mm.

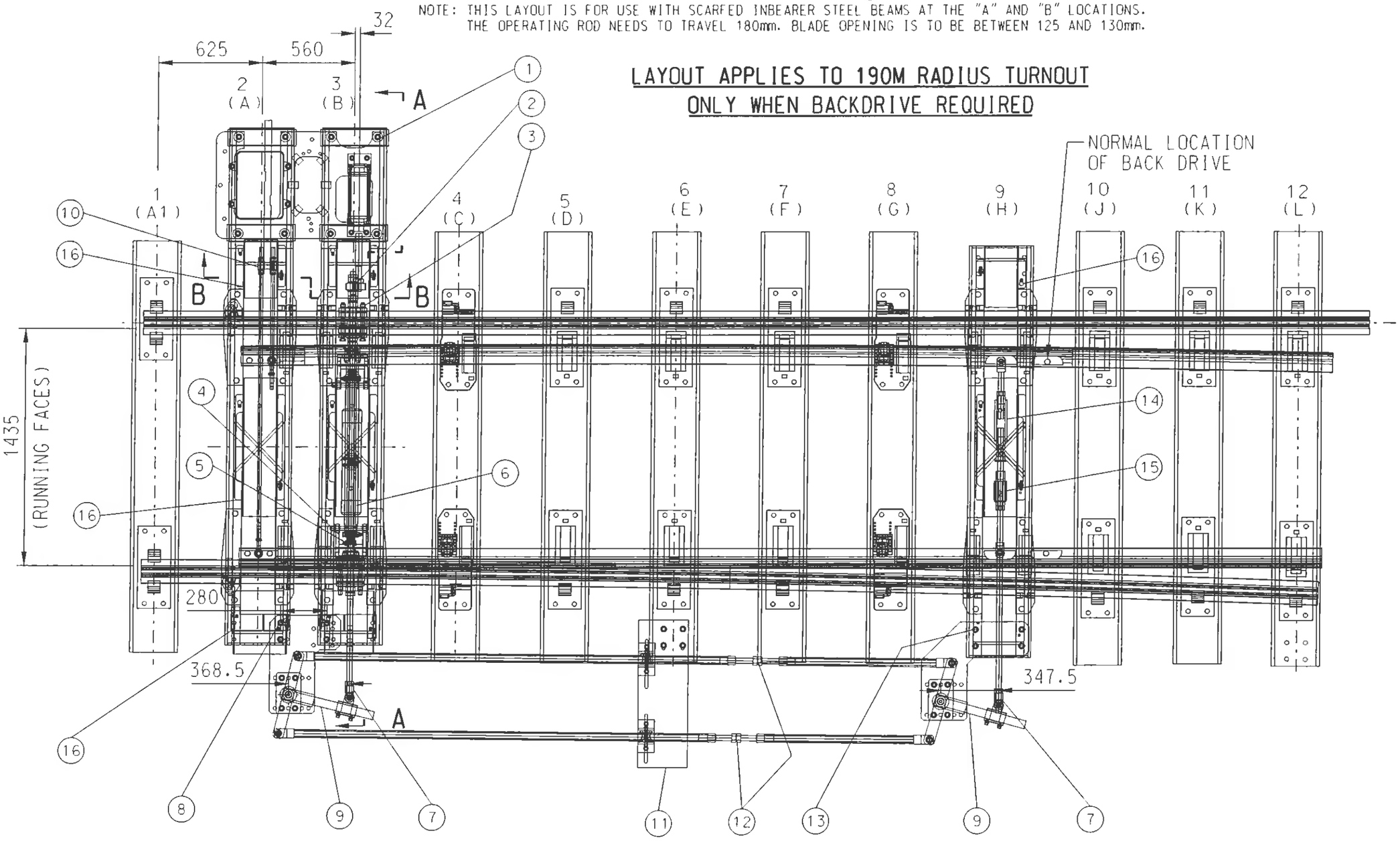

VERSION	DESCRIPTION	DATE	DRAWN	REVIEWED	VERIFIED	APPROVED

This drawing and the information contained thereon have been created solely for a particular purpose and client. This is protected by copyright. You may not reproduce any of it in any form without the written permission of Rail Corporation New South Wales. If you do, you may have to pay damages to Rail Corporation New South Wales or you may be prosecuted. ©

ALL DIMENSIONS IN MILLIMETRES

AS 1100 THIRD ANGLE PROJECTION

GENERAL TOLERANCES
LINEAR:
< 1000 ± 0.5mm
≥ 1000 ± 3mm
RADIAL:
< 500 ± 0.25mm
≥ 500 ± 1.5mm
ANGULAR: 30'

SIGNAL DESIGN

cad DO NOT AMEND MANUALLY

RailCorp
SIGNALS
Chief Engineer's Division

TITLE EP POINT MACHINE ON 60Kg TANGENTIAL TURNOUT SPHEROLOCK IN FRONT INBEARER AND BACKDRIVE STRETCHER BAR IN REAR INBEARER

DESIGNED	DRAWN	REVIEWED	VERIFIED	APPROVED
C.Liang	C.Liang	RLF		
DATE 06/09/2010	SCALE N.T.S.	DRG. No. M10-735	SHEET 1 OF 3 Part 1	REV. No. 0 A3

DF 400×277

E.P. POINT MACHINE USED IN 60Kg TANGENTIAL TURNOUT

NOTE: THIS LAYOUT IS FOR USE WITH SCARFED INBEARER STEEL BEAMS AT THE "A" AND "B" LOCATIONS.
THE OPERATING ROD NEEDS TO TRAVEL 180mm. BLADE OPENING IS TO BE BETWEEN 125 AND 130mm.

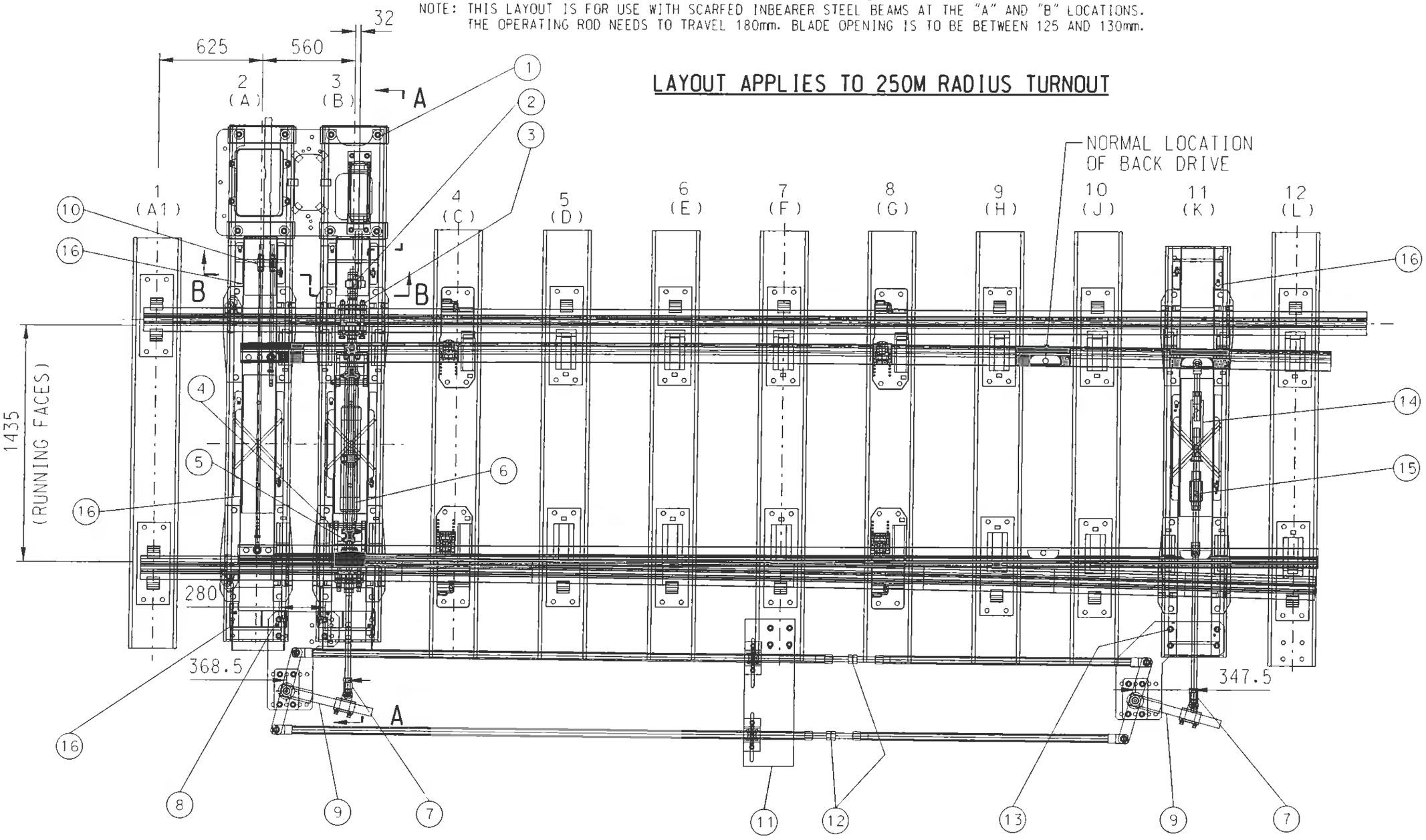

VERSION	DESCRIPTION	DATE	DRAWN	REVIEWED	VERIFIED	APPROVED
1	PART 1 IN THE SHEET 1 FOR R190M TURNOUT ADDED	6/09/10	C.L.			

This drawing and the information contained therein have been created solely for a particular purpose and client. This is protected by copyright. You may not reproduce any of it in any form without the written permission of Rail Corporation New South Wales. If you do, you may have to pay damages to Rail Corporation New South Wales or you may be prosecuted. ©

ALL DIMENSIONS IN MILLIMETRES

AS 1100 THIRD ANGLE PROJECTION

GENERAL TOLERANCES
LINEAR:
< 1000 ± 0.5mm
≥ 1000 ± 3mm
RADIAL:
< 500 ± 0.25mm
≥ 500 ± 1.5mm
ANGULAR: 30'

RailCorp
SIGNALS
Chief Engineer's Division

SIGNAL DESIGN

cad DO NOT AMEND MANUALLY

TITLE EP POINT MACHINE ON 60Kg TANGENTIAL TURNOUT SPHEROLOCK IN FRONT INBEARER AND BACKDRIVE STRETCHER BAR IN REAR INBEARER

DESIGNED	DRAWN	REVIEWED	VERIFIED	APPROVED
C.Liang	C.Liang	R.L.F.	A.N.	R.W.A.
DATE 16/06/2010	SCALE N.T.S.	DRG. No. M10-735	SHEET 1 OF 3 Part 2	REV. No. 1

A3

DF 400×277

E.P. POINT MACHINE USED IN 60Kg TANGENTIAL TURNOUT

NOTE: THIS LAYOUT IS FOR USE WITH SCARFED INBEARER STEEL BEAMS AT THE "A" AND "B" LOCATIONS.
THE OPERATING ROD NEEDS TO TRAVEL 180mm. BLADE OPENING IS TO BE BETWEEN 125 AND 130mm.

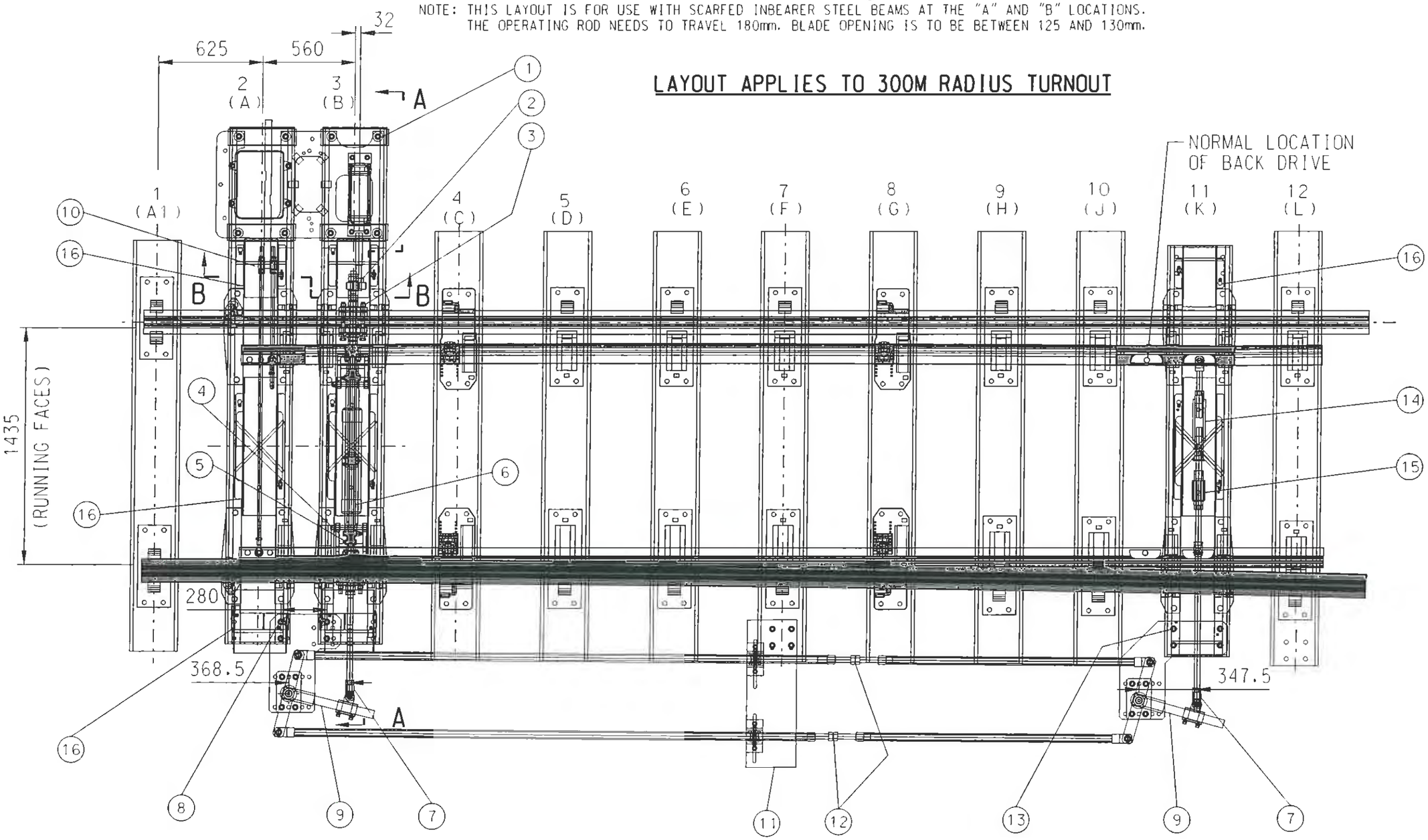

VERSION	DESCRIPTION	DATE	DRAWN	REVIEWED	VERIFIED	APPROVED
1	PART 1 IN THE SHEET 1 FOR R190M TURNOUT ADDED	6/09/10	C.L.			

This drawing and the information contained thereon have been created solely for a particular purpose and client. This is protected by copyright. You may not reproduce any of it in any form without the written permission of Rail Corporation New South Wales. If you do, you may have to pay damages to Rail Corporation New South Wales or you may be prosecuted. ©

ALL DIMENSIONS IN MILLIMETRES

AS 1100 THIRD ANGLE PROJECTION

GENERAL TOLERANCES
LINEAR: < 1000 ± 0.5mm; ≥ 1000 ± 3mm
RADIAL: < 500 ± 0.25mm; ≥ 500 ± 1.5mm
ANGULAR: 30'

SIGNAL DESIGN

cad DO NOT AMEND MANUALLY

RailCorp SIGNALS Chief Engineer's Division

TITLE EP POINT MACHINE ON 60Kg TANGENTIAL TURNOUT SPHEROLOCK IN FRONT INBEARER AND BACKDRIVE STRETCHER BAR IN REAR INBEARER

DESIGNED	DRAWN	REVIEWED	VERIFIED	APPROVED
C.Liang	C.Liang	R.L.F.	A.N.	R.W.A.
DATE 16/06/2010	SCALE N.T.S.	DRG. No. M10-735	SHEET 1 OF 3 Part 3	REV. No. 1

A3

DF 400x277

E.P. POINT MACHINE USED IN 60Kg TANGENTIAL TURNOUT

NOTE: THIS LAYOUT IS FOR USE WITH SCARFED INBEARER STEEL BEAMS AT THE "A" AND "B" LOCATIONS.
THE OPERATING ROD NEEDS TO TRAVEL 180mm. BLADE OPENING IS TO BE BETWEEN 125 AND 130mm.

LAYOUT APPLIES TO 500M RADIUS TURNOUT

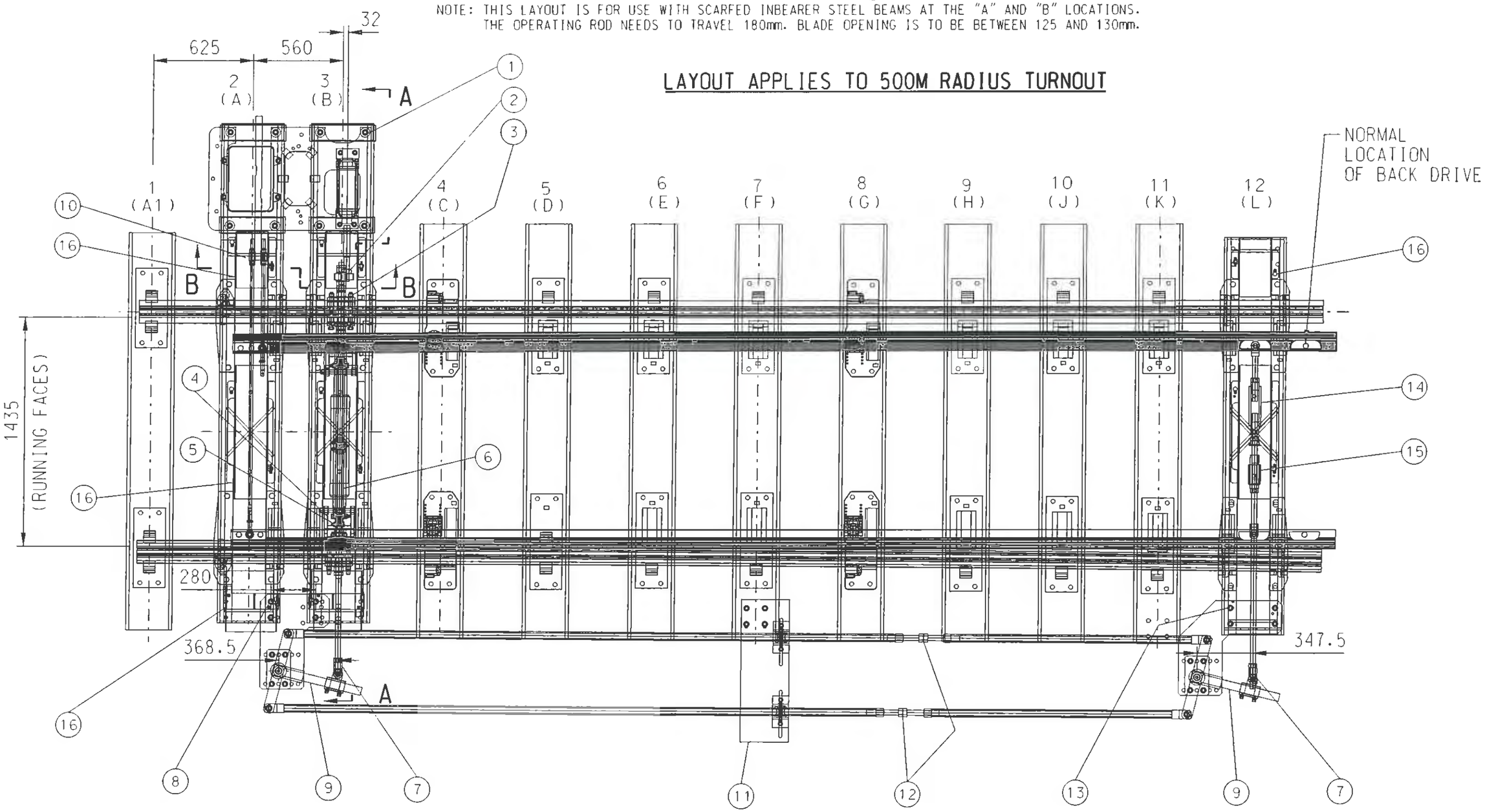

VERSION	DESCRIPTION	DATE	DRAWN	REVIEWED	VERIFIED	APPROVED
1	PART 1 IN THE SHEET 1 FOR R190M TURNOUT ADDED	5/09/10	C.L.			

This drawing and the information contained thereon have been created solely for a particular purpose and client. This is protected by copyright. You may not reproduce any of it in any form without the written permission of Rail Corporation New South Wales. If you do, you may have to pay damages to Rail Corporation New South Wales or you may be prosecuted. ©

ALL DIMENSIONS IN MILLIMETRES

AS 1100 THIRD ANGLE PROJECTION

GENERAL TOLERANCES
LINEAR:
< 1000 ± 0.5mm
≥ 1000 ± 3mm
RADIAL:
< 500 ± 0.25mm
≥ 500 ± 1.5mm
ANGULAR: 30'

SIGNAL DESIGN

cad DO NOT AMEND MANUALLY

RailCorp
SIGNALS
Chief Engineer's Division

TITLE EP POINT MACHINE ON 60Kg TANGENTIAL TURNOUT SPHEROLOCK IN FRONT INBEARER AND BACKDRIVE STRETCHER BAR IN REAR INBEARER

DESIGNED	DRAWN	REVIEWED	VERIFIED	APPROVED
C.Liang	C.Liang	R.L.F.	A.N.	R.W.A.
DATE 16/06/2010	SCALE N.T.S.	DRG. No. M10-735	SHEET 1 OF 3 Part 4	REV. No. 1

A3

DF 400x277

E.P. POINT MACHINE USED IN 60Kg TANGENTIAL TURNOUT

NOTE: THIS LAYOUT IS FOR USE WITH SCARFED INBEARER STEEL BEAMS AT THE "A" AND "B" LOCATIONS.
THE OPERATING ROD NEEDS TO TRAVEL 180mm. BLADE OPENING IS TO BE BETWEEN 125 AND 130MM.

LAYOUT APPLIES TO 800M RADIUS TURNOUT

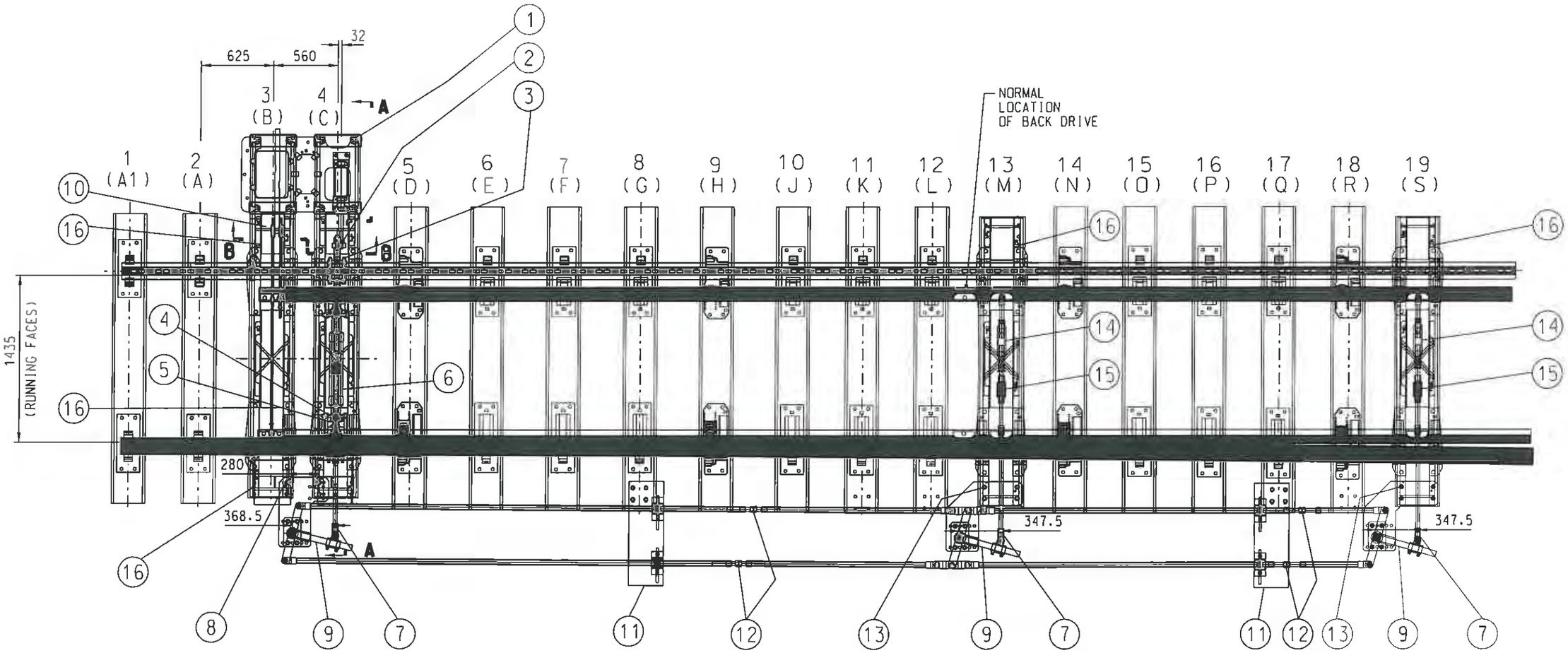

VERSION	DESCRIPTION	DATE	DRAWN	REVIEWED	VERIFIED	APPROVED
2	RAIL PLATE UPDATED NEAR 2ND REAR BACKDRIVE	1/02/11	C.L.		RLF	
1	PART 1 IN THE SHEET 1 FOR R190M TURNOUT ADDED	6/09/10	C.L.	C.L.	RLF	W.A.

This drawing and the information contained thereon have been created solely for a particular purpose and client. This is protected by copyright. You may not reproduce any of it in any form without the written permission of Rail Corporation New South Wales. If you do, you may have to pay damages to Rail Corporation New South Wales or you may be prosecuted. ©

ALL DIMENSIONS IN MILLIMETRES

AS 1100 THIRD ANGLE PROJECTION

GENERAL TOLERANCES
LINEAR:
< 1000 ± 0.5mm
≥ 1000 ± 3mm
RADIAL:
< 500 ± 0.25mm
≥ 500 ± 1.5mm
ANGULAR: 30'

SIGNAL DESIGN

cad DO NOT AMEND MANUALLY

RailCorp
SIGNALS
Chief Engineer's Division

TITLE EP POINT MACHINE ON 60Kg TANGENTIAL TURNOUT SPHEROLOCK IN FRONT INBEARER AND BACKDRIVE STRETCHER BAR IN REAR INBEARER

DESIGNED	DRAWN	REVIEWED	VERIFIED	APPROVED
C.Liang	C.Liang	R.L.F.	A.N.	R.W.A.
DATE 16/06/2010	SCALE N.T.S.	DRG. No. M10-735	SHEET 1 OF 3 Part 5	REV. No. 2

A3

DF 400x277

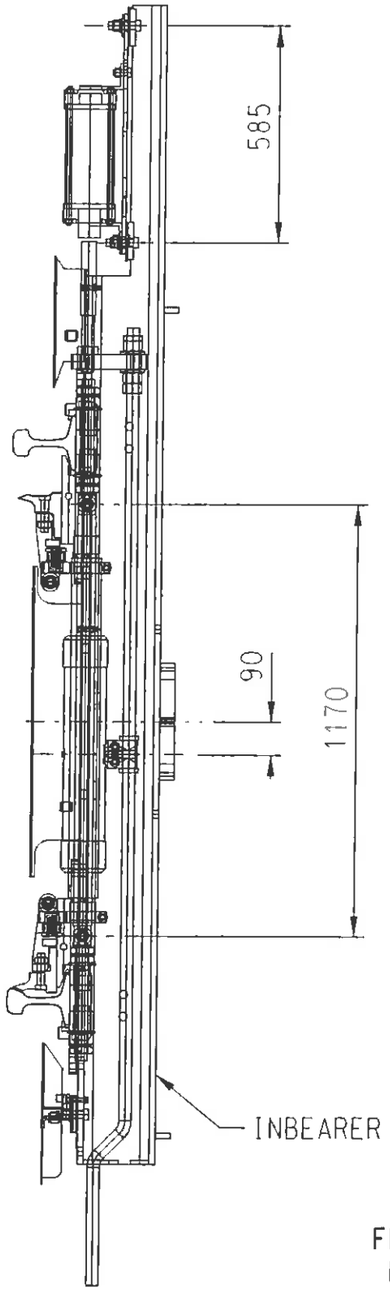

A - A VIEW

FRONT SPHEROLOCK DRIVEN
BY E.P. POINT MACHINE

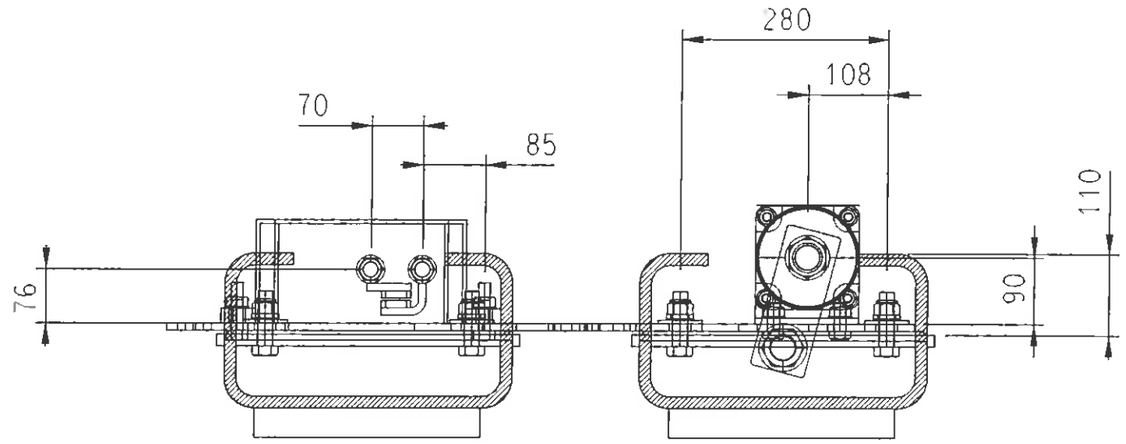

B - B VIEW

EP POINT MACHINE AND
HM2 DETECTOR SETTING

VERSION	DESCRIPTION	DATE	DRAWN	REVIEWED	VERIFIED	APPROVED

GENERAL TOLERANCES
LINEAR:
< 1000 ± 0.5mm
≥ 1000 ± 3mm
RADIAL:
< 500 ± 0.25mm
≥ 500 ± 1.5mm
ANGULAR: 30'

RailCorp
SIGNALS
Engineering Standards & Services Division

SIGNAL DESIGN

cad DO NOT AMEND MANUALLY

This drawing and the information contained thereon have been created solely for a particular purpose and client. This is protected by copyright. You may not reproduce any of it in any form without the written permission of Rail Corporation New South Wales. If you do, you may have to pay damages to Rail Corporation New South Wales or you may be prosecuted. ©

ALL DIMENSIONS IN MILLIMETRES

AS 1100 THIRD ANGLE PROJECTION

TITLE EP POINT MACHINE ON 60Kg TANGENTIAL TURNOUT SPHEROLOCK IN FRONT INBEARER AND BACKDRIVE STRETCHER BAR IN REAR INBEARER

DESIGNED	DRAWN	REVIEWED	VERIFIED	APPROVED
C.Liang	C.Liang	RLF		
DATE 16/06/2010	SCALE N.T.S.	DRG. No. M10-735	SHEET 2 OF 3	REV. No. 0 A3

DF 400x277

SECTIONS LIST FOR EP POINT MACHINE WITH SPHEROLOCK ON 60KG TANGENTIAL TURNOUT USING SCARFED IN-BEARERS "A" AND "B", REAR INBEARER FOR BACKDRIVE STRETCHER BAR

SECTION No.	SECTION DESCRIPTION	DRAWING REFERENCE	QTY	REMARK	SECTION No.	SECTION DESCRIPTION	DRAWING REFERENCE	QTY	REMARK
12	BACKDRIVE SET (EXCLUDE LENGTH OF BACKDRIVE PIPES)	M02-630 SHT 1 TO 2 M02-635	1	NOTE DWG M02-635 APPLIES TO R800M LAYOUT ONLY	24				
11	ROLLERSTAND DEVICE AND BASEPLATE SET	M03-203 AND M02-631	1 (2)	NOTE NUMBER IN BRACKET APPLIES TO R800M LAYOUT ONLY	23				
10	SHORT/LONG DETECTOR ROD SETS	M02-166, M02-282 SHT 1 TO 6, M02-648, M02-669	1		22				
9	TEE CRANK AND BASE WITH ASSOCIATED COMPONENTS	M10-834-3 SHT 1 TO 3 SECTION 10	2 (3)	ASSOCIATED RAILCORP DWG M02-027, M02-166, M02-628, M02-632, M02-636 AND M02-676 NOTE NUMBER IN BRACKET APPLIES TO R800M LAYOUT ONLY	21				
8	BASEPLATE SET FOR FRONT INBEARER	M10-834-3 SHT 1 TO 3 SECTION 9	1	ASSOCIATED RAILCORP DWG M02-027, M02-360/1	20				
7	F SHAPED DROPLUG SET	M10-834-3 SHT 1 TO 3 SECTION 8	2 (3)	ASSOCIATED RAILCORP DWG M02-355, M02-624 AND M02-636 NOTE NUMBER IN BRACKET APPLIES TO R800M LAYOUT ONLY	19				
6	SPHEROLOCK UNIT AND DRIVING BLOCK AND ROD	M10-734-2 SHT 1 TO 3 SECTION 6	1	ASSOCIATED VAE DRAWINGS AND RAILCORP DRAWING M02-358	18				
5	PRESSURE HEAD UNIT	M10-734-2 SHT 1 TO 3 SECTION 5	2	PROVIDED BY VAE	17				
4	BLADE SUPPORT BRACKET UNIT	M10-734-2 SHT 1 TO 3 SECTION 4	2	PROVIDED BY VAE	16	VARIOUS COVERS FOR INBEARER	M02-673 SHT 1 TO 3	2	
3	STOCK RAIL SUPPORT BRACKETS 1 & 2	M10-734-2 SHT 1 TO 3 SECTION 3	2	ASSOCIATED WITH VAE DWG 123NX2-000-00 AND RAILCORP DWG M02-690	15	THIMBLE & BOBBIN SET AND DRIVE ROD	M10-834-4 SHT 1 TO 2 SECTION 16	1 (2)	ASSOCIATED RAILCORP DWG M02-624, M02-625 AND M02-632 NOTE NUMBER IN BRACKET APPLIES TO R800M LAYOUT ONLY
2	DRIVE LUG CONNECTION FOR EP POINT MACHINE AND SPHEROLOCK (FOR SCARFED LAYOUT)	M10-735-1 SHT 1 TO 2	1	ASSOCIATED RAILCORP DWG M02-356, M02-624, M02-669	14	REAR BACKDRIVE STRETCHER BAR	M10-834-4 SHT 1 TO 2 SECTION 15	1 (2)	ASSOCIATED RAILCORP DWG M02-166, M02-624 AND M02-632 NOTE NUMBER IN BRACKET APPLIES TO R800M LAYOUT ONLY
1	EP POINT MACHINE, HM2 DETECTOR AND BASEPLATE	M10-735-1 SHT 1 TO 2	1	ASSOCIATED RAILCORP DWG M02-639, M02-656	13	BASEPLATE SET FOR REAR INBEARER	M10-834-3 SHT 1 TO 3 SECTION 14	1 (2)	ASSOCIATED RAILCORP DWG M02-360/2 NOTE NUMBER IN BRACKET APPLIES TO R800M LAYOUT ONLY

VERSION	DESCRIPTION	DATE	DRAWN	REVIEWED	VERIFIED	APPROVED

GENERAL TOLERANCES
LINEAR: < 1000 ±0.5mm; ≥ 1000 ±3mm
RADIAL: < 500 ± 0.25mm; ≥ 500 ± 1.5mm
ANGULAR: 30'

RailCorp SIGNALS
Engineering Standards & Services Division

SIGNAL DESIGN

This drawing and the information contained thereon have been created solely for a particular purpose and client. This is protected by copyright. You may not reproduce any of it in any form without the written permission of Rail Corporation New South Wales. If you do, you may have to pay damages to Rail Corporation New South Wales or you may be prosecuted. ©

ALL DIMENSIONS IN MILLIMETRES

AS 1100 THIRD ANGLE PROJECTION

cad DO NOT AMEND MANUALLY

TITLE EP POINT MACHINE ON 60Kg TANGENTIAL TURNOUT SPHEROLOCK IN FRONT INBEARER AND BACKDRIVE STRETCHER BAR IN REAR INBEARER

DESIGNED	DRAWN	REVIEWED	VERIFIED	APPROVED
C.Liang	C.Liang	RLF		
DATE 16/06/2010	SCALE N.T.S.	DRG. No. M10-735	SHEET 3 OF 3	REV. No. 0 A3

DF 400•277

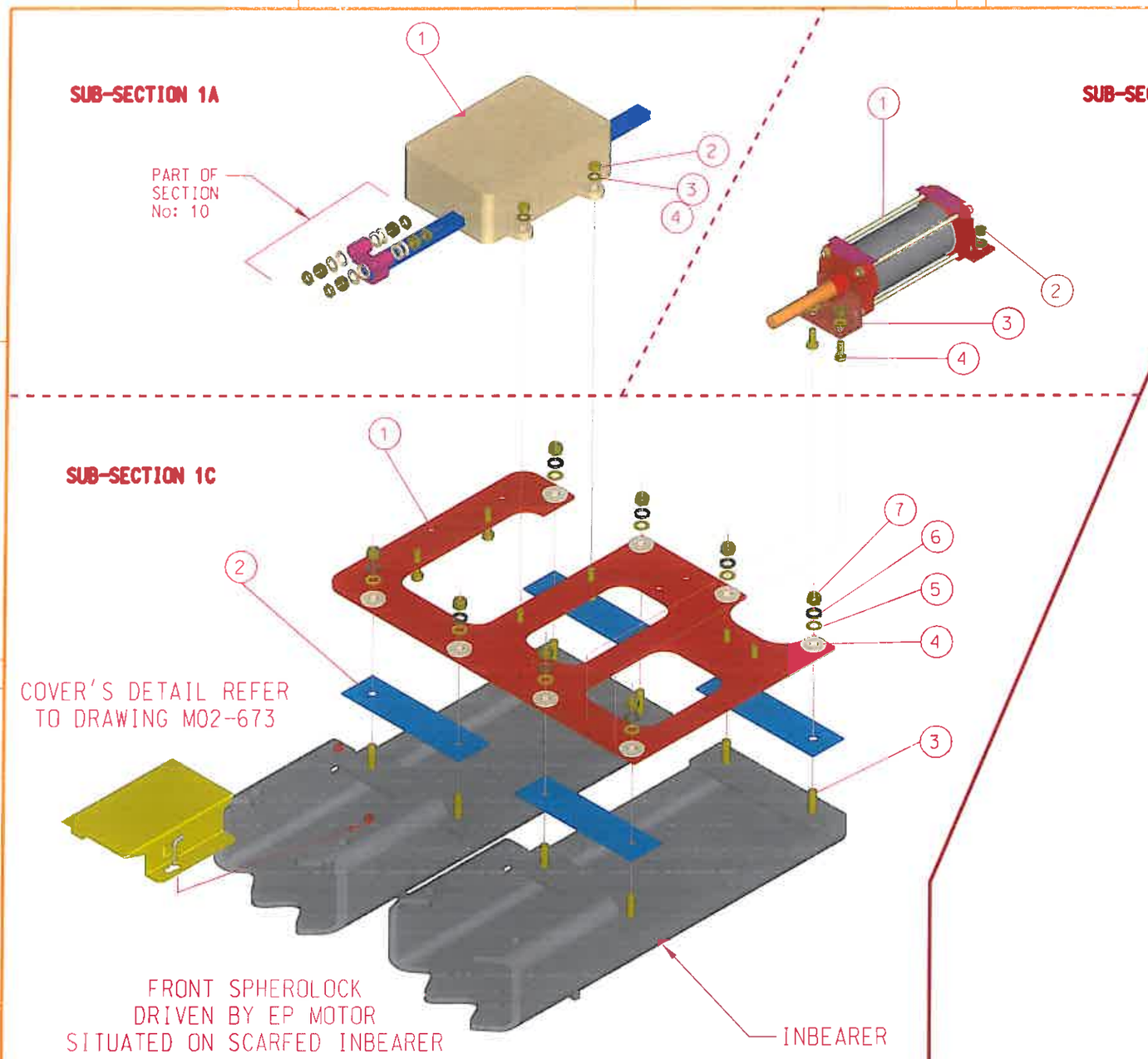

SECTION No: 1 - EP POINT MACHINE, HM2 DETECTOR AND BASEPLATE

SECTION No: 2 - DRIVE LUG CONNECTION FOR EP POINT MACHINE AND SPHEROLOCK (FOR SCARFED LAYOUT)

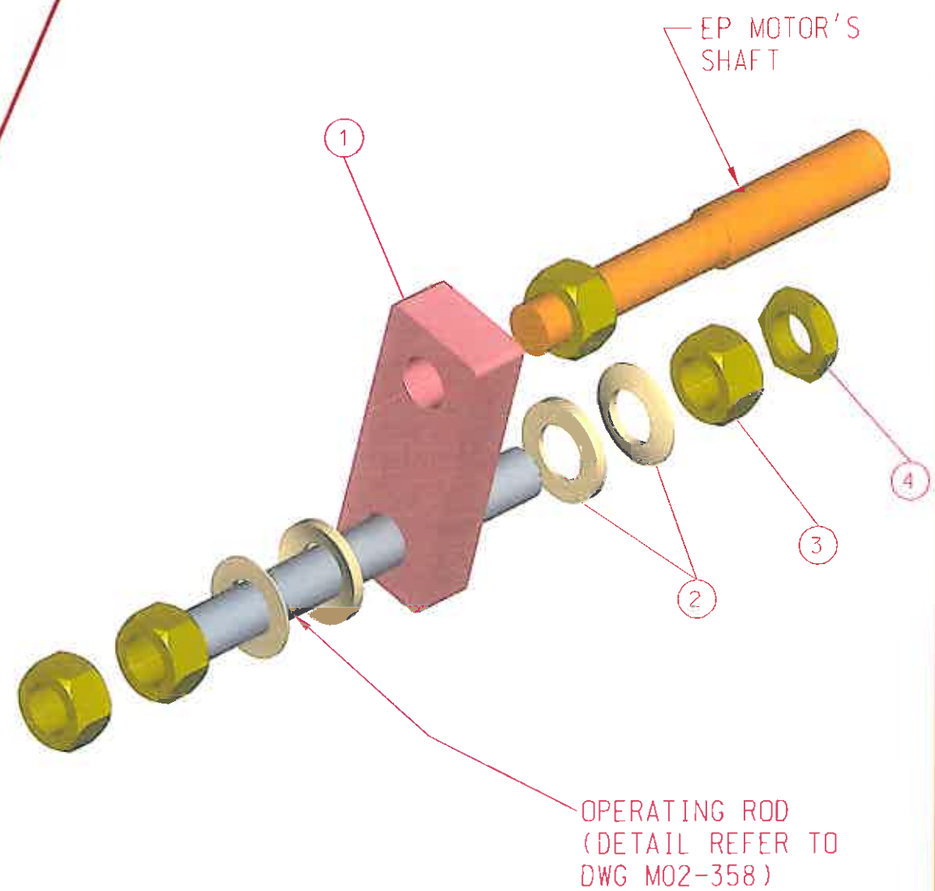

VERSION	DESCRIPTION	DATE	DRAWN	REVIEWED	VERIFIED	APPROVED

GENERAL TOLERANCES
LINEAR:
< 1000 ±0.5mm
≥ 1000 ±3mm
RADIAL:
< 500 ± 0.25mm
≥ 500 ± 1.5mm
ANGULAR: 30'

SIGNAL DESIGN

This drawing and the information contained thereon have been created solely for a particular purpose and client. This is protected by copyright. You may not reproduce use of it in any form without the written permission of RailCorporation New South Wales. If you do you may have to pay damages to RailCorporation New South Wales or you may be prosecuted.

C

ALL DIMENSIONS IN MILLIMETRES

AS 1100 THIRD ANGLE PROJECTION

RailCorp SIGNALS
Engineering Standards & Services Division

DO NOT AMEND MANUALLY

TITLE EP POINT MACHINE ON 60Kg TANGENTIAL TURNOUT SPHEROLOCK IN FRONT INBEARER SECTION No 1 AND SECTION No 2

DRAWN	REVIEWED	VERIFIED	APPROVED
C.Liang	C.Liang		
16/06/2010	N.T.S.		

DWG No M10-735-1 SHEET 1 OF 2 REV No 0 A3

SECTION No: 1 (CONTAINED SUB-SECTION 1A & 1B & 1C)

ITEM No	PART NUMBER	ITEM DESCRIPTION	QTY	MAT/SPEC	FINISH	DWG REF	STOCK CODE
1A-1		INVENSYS HM2 DETECTOR	1				
1A-2	0209 3808	M16 NYLOC NUT	4	DIN 985	ZINC PLATED		BLACKWOODS
1A-3	0034 3806	M16 FLAT WASHER	4	AS1237	ZINC PLATED		BLACKWOODS
1A-4	0284 2800	M16 X 60 LONG HEX HEAD BOLT	4	Gr4.6 AS1111	ZINC PLATED		BLACKWOODS
1B-1		125MM EP POINT MOTOR	1				
1B-2	0209 3808	M16 NYLOC NUT	4	DIN 985	ZINC PLATED		BLACKWOODS
1B-3	0034 3806	M16 FLAT WASHER	4	AS1237	ZINC PLATED		BLACKWOODS
1B-4	0284 2800	M16 X 60 LONG HEX HEAD BOLT	4	Gr4.6 AS1111	ZINC PLATED		BLACKWOODS
1C-1	M02639A	BASEPLATE FOR M3A, 84M, EP POINT MOTORS	1	AS3678-250	R.O.Z.P.	M02-639	2077725
1C-2	M02656A	INSULATING PLATE TO GO UNDER MOTOR BASEPLATE	4	HDPE, 5 THICK	NATURAL	M02-656	EQUIVALENT TO VAE DWG VAM13575 ITEM 7
1C-3	0284 5001	M20 X 75 LONG HEX HEAD BOLT	11	Gr4.6 AS1111	ZINC PLATED		BLACKWOODS
1C-4	M02656B	INSULATING TOP HATS FOR MOTOR BASEPLATE	8	WHITE NYLON	NATURAL	M02-656	EQUIVALENT TO VAE DWG VAM13575 ITEM 11 & 12
1C-5	0107 6703	M20 FLAT WASHER	11	AS1237	ZINC PLATED		BLACKWOODS
1C-6	0028 0256	M20 SPRING WASHER(FLAT SECTION 6.17 X 5.46)	11	DIN 127B	GALVANISED		BLACKWOODS
1C-7	0209 3905	M20 NYLOC NUT	11	DIN 985	ZINC PLATED		1439496
1C-1	M02639B	COVER PLATE	1	AS3678-250	R.O.Z.P.	M02-639	

SECTION No: 2

ITEM No	PART NUMBER	ITEM DESCRIPTION	QTY	MAT/SPEC	FINISH	DWG REF	STOCK CODE
2-1	M02356A	DROPLUG CONNECTOR 1	1	AS3679.1-250/300 PLUS	R.O.Z.P.	M02-356	
2-2	M02669F	M33 CONCAVE/CONVEX WASHER	2 PAIRS		STAINLESS STL Gr304	M02-669	
2-3		R.H. THREAD M33 X 3.5 NUT	4		ZINC PLATED	M02-624	
2-4	0060 3466	M33 HEXAGONAL LOCK NUT	1	STEEL AS1112	GALVANISED		BLACKWOODS

VERSION	DESCRIPTION	DATE	DRAWN	REVIEWED	VERIFIED	APPROVED
1	PART NO OF ITEM 2-1 IS CORRECTED	23/9/10	C.L.			

This drawing and the information contained thereon have been created solely for a particular purpose and client. This is protected by copyright. You may not reproduce any of it in any form without the written permission of Rail Corporation New South Wales. If you do, you may have to pay damages to Rail Corporation New South Wales or you may be prosecuted. ©

ALL DIMENSIONS IN MILLIMETRES

AS 1100 THIRD ANGLE PROJECTION

GENERAL TOLERANCES
LINEAR:
< 1000 ±0.5mm
≥ 1000 ±3mm
RADIAL:
< 500 ± 0.25mm
≥ 500 ± 1.5mm
ANGULAR: 30'

SIGNAL DESIGN

RailCorp SIGNALS
Engineering Standards & Services Division

cad DO NOT AMEND MANUALLY

TITLE EP POINT MACHINE ON 60Kg TANGENTIAL TURNOUT SPHEROLOCK IN FRONT INBEARER SECTION No 1 AND SECTION No 2

DESIGNED	DRAWN	REVIEWED	VERIFIED	APPROVED
C.Liang	C.Liang	R.L.F.	A.N.	R.W.A.
DATE 16/06/2010	SCALE N.T.S.	DRG. No. M10-735-1	SHEET 2 OF 2	REV. No. 1 A3

DF 400-277