Country Bridge Solutions

Construction guide

Edition 1, Version 1.0

Roads and Maritime Services | September 2016

NSW GOVERNMENT

THIS PAGE LEFT INTENTIONALLY BLANK

Acknowledgements

- Transport for New South Wales (TfNSW)
- Roads and Maritime Services
- Institute of Public Works Engineering Australia (IPWEA) NSW.

Published by:

Roads and Maritime Services

Phone: (02) 6640 1300 Monday to Friday between 8.30am and 4.30pm

Email: CountryBridgeSolutions@rms.nsw.gov.au

Website: www.rms.nsw.gov.au/business-industry/partners-suppliers/lgr/country-brige-solutions.html

September 2016

RMS: 16.500
ISBN: 978-1-925582-14-7

Foreword

Roads and Maritime Services has prepared this document as a 'how to construct' guide for Country Bridge Solutions bridges. The guide provides a process for constructing a CBS bridge, as well as the technical information and instructions to carry out the necessary pre-construction activities.

Contents

1 Common terms used in this guide 4
2 Introduction 8
3 Requirements and Planning 12
3.1 Work Health and Safety 13
3.1.1 General safety advice 13
3.1.2 Safety in Design 13
3.1.3 Working at height 14
4 Resources required for construction of the bridge 14
4.1 Procurement of CBS components and related materials 14
4.1.1 Components and Materials Specifications 15
4.2 Plant and Equipment 16
4.2.1 Foundation Specialist Plant 16
4.2.2 Cranage 16
4.2.3 Working at Height 18
4.3 Specialist equipment 19
4.4 Demolition 19
5 Setting up the worksite 19
5.1 Site preparation 19
5.2 Site access and egress 20
5.3 Provisions for traffic management during construction 20
5.4 Setting out 21
5.5 Utilities 22
6 Construction sequence 22
6.1 Bridge options and form 22
6.1.1 Type 1: Two lane (8.5m carriageway) 23
6.1.2 Type 2: Single lane – insitu closure pour (4.2m carriageway) 23
6.1.3 Type 3: Single lane – longitudinal joint (4.2m carriageway) 24
6.2 Foundations and substructure 24
6.2.1 Substructure types 24
6.2.1.1 Option 1 – Spread footings/pile caps 24
6.2.1.2 Option 2 – Precast reinforced concrete driven piles 25
6.3 CBS Precast Abutments and Headstocks 25
6.3.1 Substructure Option 1 25
6.3.2 Substructure Option 2 28
6.4 Placing Bearings and Deck Modules 28
6.5 Completion Works 32

6.5.1 Shear Key Connection at Piers and Abutments 32
6.5.2 Module Holding Down Bracket 33
6.5.3 Cast-in-situ deck concrete 33
6.5.4 Abutment Wingwalls 37
6.5.5 Deck Joints 38
6.5.6 Completion of Traffic Barriers 38
6.5.7 General Sealing 38
6.5.8 Backfilling of the bridge abutments 38
7.5.9. Scour protection 39
7 Handling of precast components 39
7.1 Transport 39
7.2 On-load and off-load lifting 40
7.3 Site storage 40
8 Construction documentation 41
9 References 42
9.1 Country Bridge Solutions materials 42

1 Common terms used in this guide

Term	Definition
AADT	Annual Average Daily Traffic, determined by measuring the number of axle pairs crossing at a specific site per year and dividing this number by 365
Abutment sill beam	Horizontal precast concrete member that supports the deck modules and retains earth fill at the abutments
Abutment wingwall	Precast concrete that forms the abutment wall to support road material and provide scour protection to the bridge
Alignment	The geometrical form of the carriageway in the horizontal and vertical directions
AS5100	Australian standard for bridge design that sets out the requirements for the design, using limit states principles, of bridges and other structures
Asset	An item of economic value owned by a person or organisation
Asset owner	The person or body responsible for ownership of the bridge. The person or body responsible for procuring and managing the design and construction of the new bridge
Australian standard	Standards prepared, adopted or approved by Standards Australia
Blockout	A void in the abutment sill beam or pier headstock to accommodate the pile starter bars
Carriageway	That portion of a road or bridge used by vehicles, including shoulders
CBS	Country Bridge Solutions
Certification/certified	Document issued by the designer certifying that reasonable professional skill and care has been used in the preparation of the design, with a view to securing that it has been checked for compliance with the relevant standards, and has been accurately translated into construction drawings
Component	Any discreet part of the bridge brought to site for assembly
Contractor	Organisation or individual that has been contracted to construct the bridge
Crossfall	The carriageway slope perpendicular to the alignment

Term	Definition
Cut back	Trimming the top of the pile to expose the pile reinforcement bar
Deck module	CBS prestressed concrete double-T superstructure element
Design criteria	The particular requirements specified by Australian Standards and other technical documents that the design must satisfy
Designer	Organisation/person responsible for the design and certification of the bridge
Design standard	Published documents setting out specifications and procedures to ensure products, services and systems are safe, reliable and consistently perform as intended. They establish a common language which defines quality and safety criteria
Dial Before You Dig	Dial Before You Dig is a free national referral service designed to prevent damage and disruption to the vast pipe and cable networks which provides Australia with essential services
Driven pile	Precast reinforced concrete pile, installed by driving
Environmental Impact Assessment	The process by which information about the potential environmental effects of a development proposal are collected, assessed and taken into account
Fines	Particles less than 0.075 mm in diameter
Flood level	The level of the river or stream that inundate areas which are not normally covered by water
Flow rate	The amount of water that flows in a set time period
General arrangement	Drawing sheet that gives an overall view of the bridge as it will appear once constructed, including a plan, elevation, typical cross section, site plan and vertical alignment diagram (as appropriate), and general notes pertaining to the whole drawing set
Gross vehicle mass (GVM)	Maximum operating weight or mass of a vehicle as specified by the manufacturer
Headstock support frame	Steel frame that supports the abutment sill beam or pier headstock before the blockout has been filled
Health Safety in Design (HSiD)	Process to incorporate control measures at an early stage in the design process to eliminate risks, to manage risk, or to minimise the risks to as low as reasonably practicable for the life of the structure

Term	Definition
Holding down bracket	Steel frame that provides uplift restraint between the deck modules and the abutment sill beam or pier headstock
In-situ	(Latin) translates literally to "on site" or "in position", i.e. cast in-situ concrete piers
In-situ concrete closure strip	Permanent cast in-situ concrete element that joins adjacent deck modules in the same span
In-situ concrete infill for abutment sill beam on pier headstock	Permanent cast in-situ concrete element that joins the piles to the abutment sill beam or pier headstock
Laminated elastomeric bearing	A bearing made from natural rubber that has two or more metal plates bonded into it
Low performance traffic barrier	Twin rail steel traffic barrier designed to meet low performance level criteria in accordance with AS5100
Module holding down bracket	Stainless steel bracket assembly that provides uplift restraint to the superstructure during submergence
Multi-span	More than one consecutive span
Pier headstock	Horizontal precast concrete member that supports the deck modules at piers
Pile	Fully or partially buried bridge element arranged vertically and providing bridge foundation
Pile cap	Structural element connecting the driven piles or spread footing to columns that connect to the pier headstock
Pilot hole	Small hole that is used to guide the location of the final full sized hole
Roads and Maritime Services Engineering Services – Bridge engineering	The authority responsible for design and certification of CBS components
Safety in Design	Process to incorporate control measures at an early stage in the design process to eliminate risks, to manage risks, or to minimise the risks to as low as reasonably practicable for the life of the structure
Scour	The erosion of material by the action of flowing water
Scour protection	Measures taken to reduce the effects of scour around bridge foundations and road embankments, such as large loose stones (rip rap) or gabions
SM1600	Traffic loading model defined in AS5100, Part 2: Design loads

Term	Definition
Soffit	Downward facing surface of any bridge component
Span	The horizontal distance between supports of a member
Spread footing	Bridge foundation founded directly on rock
Staged construction	Demolishing part of the existing bridge to allow construction of the new bridge on the same alignment, whilst maintaining use of the existing bridge
Standard penetration test (SPT)	A dynamic in-situ penetration test that provides geotechnical engineering properties of soils
T44	Traffic loading model defined in AUSTROADS Bridge Design Code 1996, Part 2: Design loads
Thrie beam	A longitudinal semi-rigid steel barrier comprising post and rail
Timber beam bridge	Bridge in which the principal means of spanning between piers is longitudinal timber members, typically round undressed hardwood
Utility owner	The owner or body responsible for the safe management of public utilities or public services, ie electricity, gas, water

2 Introduction

Background

When a bridge is closed or is load limited, the impact on regional communities and the local economy can be significant.

Local councils, as road authorities, face the growing challenge of maintaining and eventually replacing ageing bridges on Regional and Local roads.

The NSW Government is developing Country Bridge Solutions (CBS) to help councils meet this challenge. CBS will:

- Provide regional and rural councils with simple and easy to build bridge solutions developed by expert bridge engineers
- Deliver cost savings through the use of standardised bridge components
- Use existing council resources and regional manufacturing capability to replace and build bridges
- Assist council staff during investigation, design, construction and maintenance through the provision of technical guides
- Promote regional economic growth through local employment opportunities

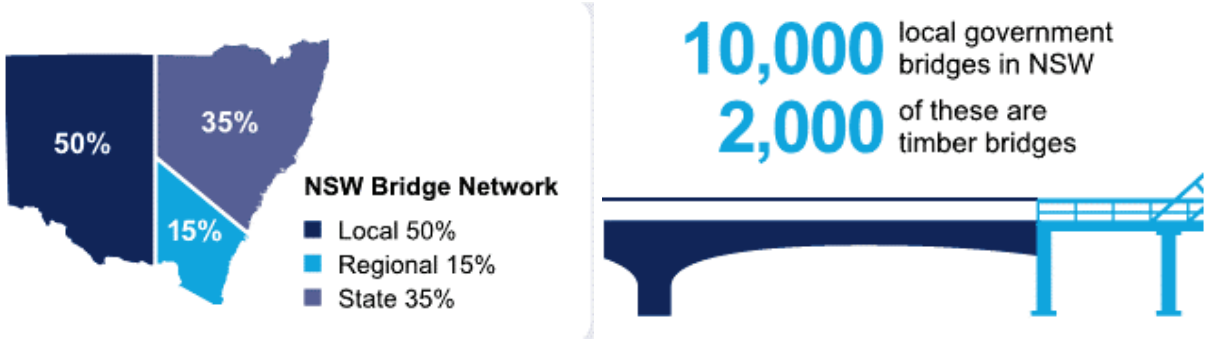

CBS prestressed concrete modular bridge system

What is CBS?

CBS is a modular bridge system developed by Roads and Maritime Services (Roads and Maritime) to assist councils in replacing bridges on regional and local road networks. The system delivers an innovative and reliable standard bridge design and construction sequence consistent with both Australian Standards and Roads and Maritime technical documents.

Conceived for the replacement of ageing timber beam road bridges in regional NSW, the CBS system has two key strengths:

1. It provides a suite of standardised solutions that can be constructed under various site conditions with minimal variation to the design of the bridge components.
2. Its designs are supported by a set of best practice guides that clearly explain the processes that need to be followed throughout the entire asset life cycle in order to ensure a high quality, durable, safe and fit-for-purpose bridge solution for each site.

Key features of CBS include:

- A suite of standard bridge drawings for a modular bridge solution.
- Guidance on solution selection, site investigation, detailed design, construction, operation and maintenance management provided in a set of four best practice guides.
- A fully certified bridge deck system, incorporating prestressed concrete double-T deck modules.
- Standardised substructure components that can be easily adapted to suit a range of site conditions.
- Three standard bridge configurations to suit different future traffic demands and site constraints, including a two-lane and a single-lane 'stitched' solution, as well as a simplified 'butted' solution for remote sites with very low expected heavy vehicle traffic volumes.

Why CBS?

The CBS system provides councils with:

1. High quality, durable and easy to build structural solutions developed by technical experts in bridge infrastructure and explained in guides written in plain language.
2. New bridges designed to current Australian bridge design standard traffic loading.
3. Opportunity to improve access for heavy vehicles and agricultural equipment through an enhanced standard carriageway width.
4. Opportunities to use local labour resources and regional manufacturing capability.
5. Transportability of precast components on standard General Access trucks.
6. Minimised on-site concrete requirements, especially for remote lightly trafficked sites.
7. Low performance level traffic barriers suitable for submergence.
8. Guidance on bridge asset management.
9. Reduced maintenance requirements resulting from a 100 year design life.
10. Increased capacity of regional transport networks to the benefit of community and commerce.

Responsibilities

Roads and Maritime has standard drawings for the components of a modular bridge solution, as well as guides covering solution selection, site investigation, detailed design, construction, operation and maintenance management.

Though not an exhaustive list, the responsibilities of the council, should they choose to use CBS, include the following:

- Produce or procure a set of detailed drawings for each site, incorporating the standard deck modular system and adapting the substructure components to the site conditions
- Certify the final bridge design for the site
- Meet all WHS obligations during investigation, design, construction and maintenance operations
- Meet all environment and heritage obligations during investigation, design, construction and maintenance operations.

2.1. This Guide

This construction guide forms part of the Country Bridge Solutions (CBS) design and construction documentation and is intended to provide general procedures for construction. The construction guide for the CBS system has been developed to assist NSW councils with the construction activities involved in replacing existing ageing timber beam bridges with the CBS modular bridge system. It provides advice specific to the CBS bridges for the different stages of construction from planning through to commissioning.

This guide is intended only to advise NSW councils to general considerations relating to the construction activities involved in the CBS modular bridge system. RMS does not warrant that it is complete, accurate or up-to-date. It is the responsibility of council to ensure that it complies with all applicable laws in NSW. Council should ensure that it has the applicable people, systems, plant and equipment in place to Work Health and Safety and Environmental regulations.

This guide is intended to help council project managers, engineers, planners, supervisors and construction personnel to make informed decisions and therefore construct successful bridge projects. It promotes construction practices recommended by experienced bridge engineers and construction supervisors.

Before reading this guide it is expected the investigation stage and the design stage processes have been completed. If not, please refer back to the previous guides to finish these activities before moving on to construction.

This guide forms part of the CBS design and construction documentation. As each bridge is individual in its design and location, this guide only addresses issues relating directly to the bridge.

The diagram below shows how this guide sits within the overall structure of the CBS process.

Figure 2-1: The Country Bridge Solutions process

2.2. Country bridge Solutions delivery process

The following information provides a brief outline of the CBS delivery process to assist the reader during the construction phase.

The CBS system delivers a set of standard components that can be combined and used for specific bridge sites with a minimum amount of design work required to complete a drawing set for a new bridge.

The whole CBS delivery process, and how the four guides combine with the CBS standard drawings and council requirements to inform that process, is shown below.

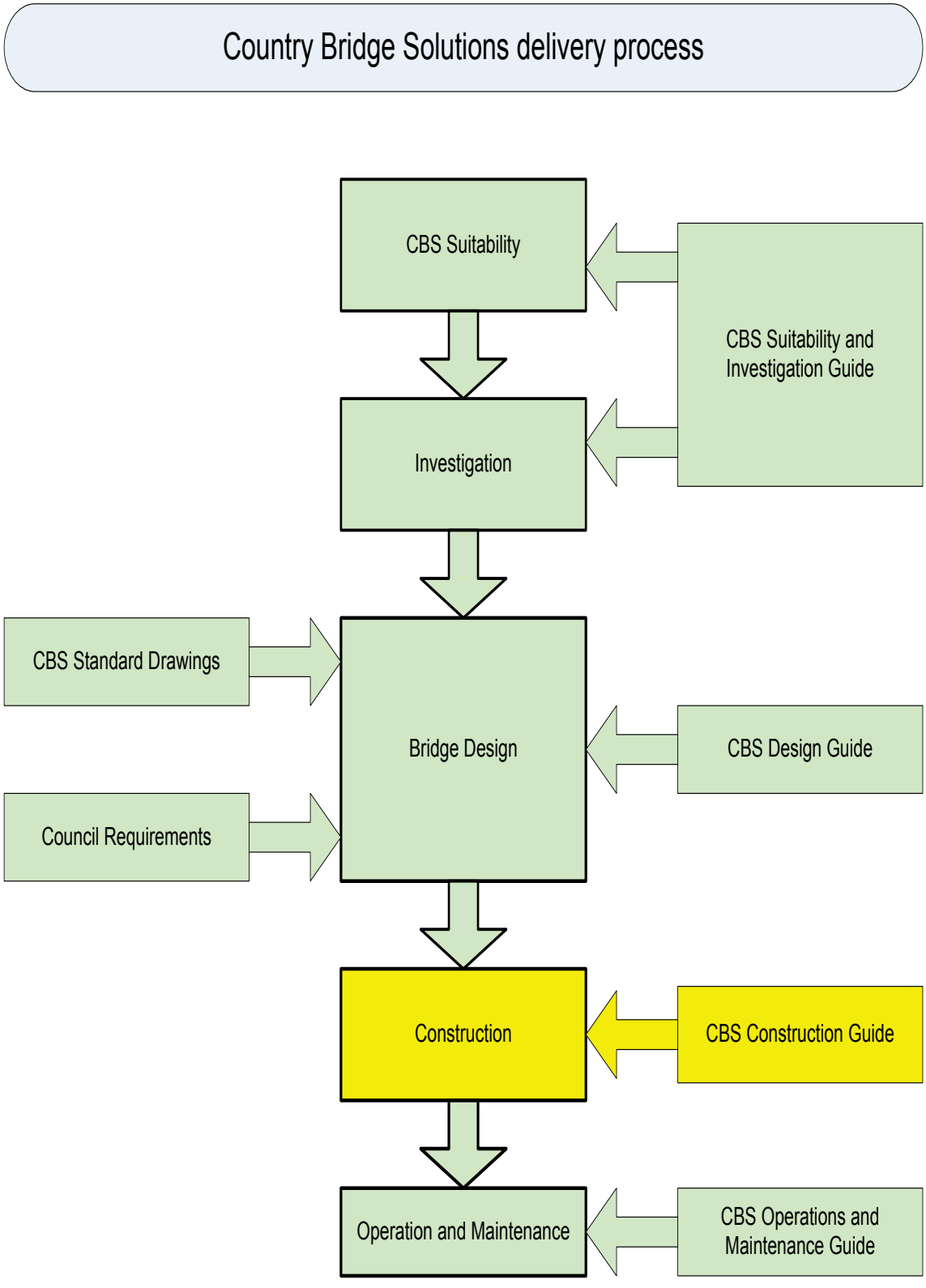

Figure 2.2 Country Bridge Solutions delivery process

2.3. How to use this Guide

The intent of this guide is to logically direct the reader through each of the stages of bridge construction, providing assistance to those who may not undertake bridge design and construction work on a frequent basis.

The information is presented as three distinct sets of activities:

- Planning the bridge work
- Setting up and mobilising the construction site
- Constructing the bridge

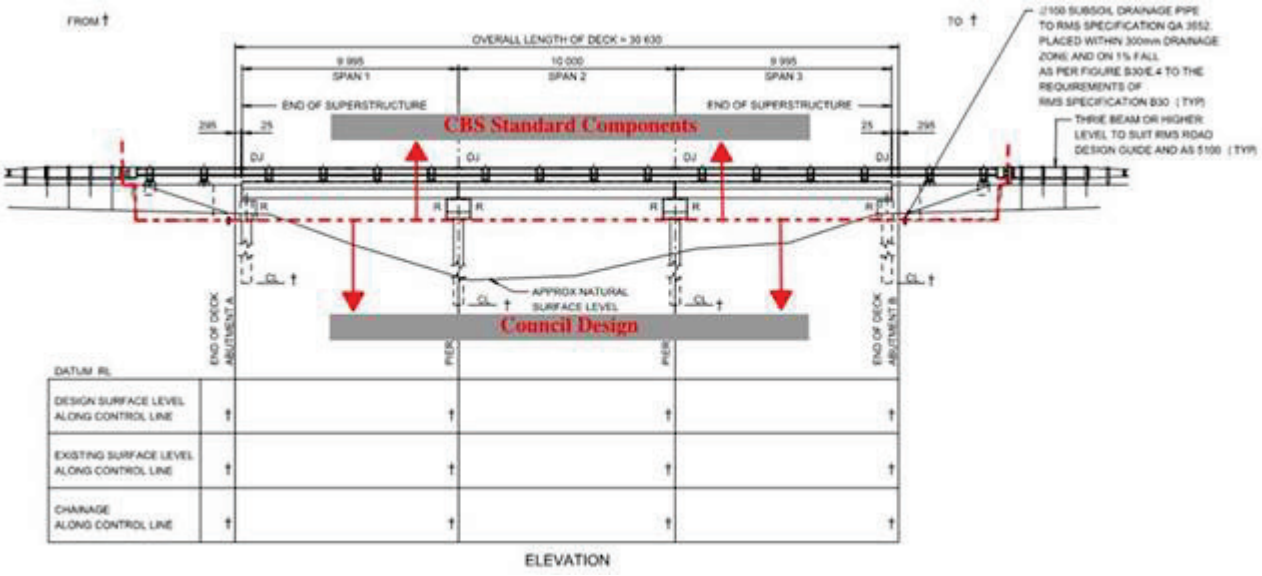

3 Requirements and Planning

Before starting construction work, it is industry best practice to prepare site specific plans that describe the processes to:

- Identify all site specific safety, technical, quality and environment requirements for the work. Typically, this would be documented in council's Quality System and would include documents such as Project Management Plan, WHS Management Plan and Environmental management Plan and Project Quality plan.
- Record how these requirements will be satisfied and how to deal with any issues in meeting the requirements.
- Document all of the above.

When developing the site specific plans for construction, it is important to consider all standards and legislative requirements, including:

- Work Health and Safety legislation and regulations compliance
- Requirements of the project Environmental Impact Assessment
- Compliance with Australian Standard AS1742.3: *Manual of Uniform Traffic Control Devices - Part 3: Traffic control for works on roads* or RMS Traffic Control at Work Sites if on State Roads.

3.1 Work Health and Safety

3.1.1 General safety advice

This guide includes general (non-site specific) Work Health and Safety guidance. The Country Bridge Solutions system assumes the asset owner and contractors are aware of the typical risks associated with structural construction activities and have the appropriate systems in place. The designer and contractor should prepare a site specific risk assessment for each bridge location as no two sites will be exactly the same. This risk assessment should identify, assess and provide management measures to eliminate or reduce so far as is reasonably practical any risks that are specific to the site location and the bridge being constructed.

Examples of site specific risks might include:

- Working around utilities, both overhead and underground
- Working in traffic
- Working over waterways
- Working at heights
- Workers on foot around plant
- Exposure to hazardous chemicals
- Working outdoors

3.1.2 Safety in Design

Safety in design (SID) considers the risks associated with choices made in design and construction of the bridge and how design changes can be made to remove (eliminate) or reduce (minimise) their effects. The standard design assumes the asset owner, designer and contractor are familiar and aware of the risks associated with structural work. The work will require a site specific risk assessment process.

To comply with the NSW *Work Health and Safety Act and Regulation 2011 and the Safe design of structures Code of Practice*, SID is a key process required when designing the new bridge. The aim of SID is to ensure, so far as is reasonably practicable, that the designed structure poses no risks to the health and safety of people who construct, use, maintain or demolish them.

The process is carried out at the beginning of the design and at key stages throughout the development of the design. SID reviews are usually carried out using the Construction Hazard Assessment Implication Review (CHAIR) process and consider all hazards relating to construction, commissioning, operation, maintenance and decommissioning of the work. The

intention is to ensure that hazards relating to design are identified at an early stage and that systems are established to control these issues and hazards.

3.1.3 Working at height

Safe access arrangements and working at height methods must comply with current Work Health and Safety legislation, relevant regulations and codes of practice. Industry best practice is to control working at heights in accordance with the NSW Workcover *Managing the risk of falls at workplaces* code of practice July 2015. There is an opportunity during casting of the precast elements to install cast-in ferrules, blockouts, etc to assist with installation of working at height controls.

To minimise safety risks while working at height, the CBS system make extensive use of precast components. However, working at height may be necessary when:

- Placing the precast headstock and abutments
- Placing the deck modules
- Joining the deck modules together.

Working at heights provision will be required around piers and abutments to facilitate the erection of precast headstock and abutment sill beams, casting of infill grout, installation of deck modules onto permanent bearings, and the installation of deck hold down assemblies, diaphragm formwork and other miscellaneous works.

4 Resources required for construction of the bridge

This section describes the major resources such as components, materials, plant and equipment that will generally be necessary to carry out the work.

4.1 Procurement of CBS components and related materials

The CBS system uses specific components, and their relevant fabrication and materials specifications are detailed on the CBS drawings.

In procuring these components, it should be confirmed whether suppliers can produce the components in accordance with the indicated specifications, including relevant testing, as well as meet timelines for the efficient construction of the bridge. Dependent on industry demand, some components can have long lead times. The proponent / construction team should thoroughly investigate this during the planning phase.

Typical CBS bridge components will include as a minimum:

- Precast concrete elements
- Bearings and associated elements
- Steel fabrication including traffic barriers, hold down brackets and bearing components
- RMS B80 Specification concrete

4.1.1 Components and Materials Specifications

The specifications associated with the work are:

- For standard CBS components – RMS Specifications listed in Table 4.1 are compulsory
- For associated works – Table 4.2 provides some recommended specifications

The specifications should detail the inspection, testing and certification requirements for the work.

Before the work starts, it should be established that:

- Components and materials that comply with the specifications can be sourced
- The components and materials can be delivered in the necessary quantities to the site in accordance with the specifications
- The bridge can be constructed in accordance with the specifications
- The bridge can be certified as complete in accordance with the specification.

CBS components **must** be fabricated and constructed in accordance with the specifications listed in Table 4-1. If the specification cannot be complied with, specialist advice must be sought.

Compulsory Specifications
RMS B115 Precast concrete members (not pretensioned) RMS B170 Supply and installation of void formers
RMS B30 Excavation and Backfill for bridgeworks
RMS B50 Driven Reinforced Concrete Piles
RMS B58 Permanently Cased Cast-in-Place Reinforced Concrete Piles (With Permanent Casing)
RMS B59 Permanently Cased Cast-in-Place Reinforced Concrete Piles (Without Permanent Casing)
RMS B80 Concrete Work for Bridges
RMS B110 Supply of Pretensioned Precast Concrete Members
RMS B150 Erection of Pretensioned Precast Concrete Members
RMS B153 Erection of Precast Concrete Members (Not Pretensioned)
RMS B312 Cold Applied Elastometric Joint Sealants
RMS B204 Welding of Bridges and Other Road Structures
RMS B220 Protective Treatment of bridge Steelworks
RMS B240 Supply of Bolts, Nuts, Screws and Washers
RMS B241 Manufacture and Supply of Minor Steel Items
RMS B264 Erection of Barrier Railings and Minor Components
RMS B281 Laminated Elastomeric Bearings
RMS B284 Installation of Bridge Bearings
RMS B344 Sprayed Bituminous Waterproofing Membranes (where required)

Table 4-1: Compulsory specifications

The following recommended specifications may also assist with the construction of a CBS bridge and are listed in Table 4.2.

Recommended Specifications
RMS B341 Demolition of existing structure
RMS R44 Earthworks

Table 4-2: Recommended specifications

4.2 Plant and Equipment

To construct a CBS bridge some key plant and/or equipment is required. Dependent on industry demand some plant, in particular those items outlined below, can have long lead times which should be thoroughly investigated during the planning phase.

4.2.1 Foundation Specialist Plant

Foundation specialist plant include piling rigs or drilling rigs for rock anchors or bored piles are generally provided by specialist contractors and should be procured early as there are often long lead times.

In regards to piling rigs, it is important to ensure the plant is capable of driving or boring the piles to the required founding depth. The drawings indicate the length of the piles, the required founding depth and the founding material. Geotechnical investigation should also provide this information. For driven piles, the maximum pile loads, the driving set and the maximum driving net energy should also be specified on the drawings. This information is used to determine the size and type of piling rig needed for the works.

Foundation plant will require good access to foundation locations and, with good planning, this access may also be used for general access and carnage.

It is recommended to engage experienced foundation contractors familiar with constructing to the required tolerances for the foundation work.

4.2.2 Cranage

Cranes used for constructing the bridge need to be able to lift and place the precast bridge components safely. The working position of the crane and the particular component weight being lifted should be considered together to determine the required crane size.

Generally, there are three options that should be considered when planning bridge carnage for a bridge project.

- A single mobile crane with temporary access. Use of well-constructed temporary access pads located as close as possible to the final installation location (usually beside the bridge) with individual locations for each span
- One large crane located behind abutments.
- Using a two crane lift (this methodology requires careful consideration and specialist advice).

The crane supplier should be able to provide lift studies and required geotechnical conditions for the crane. It is important that during the planning stage the following are considered when selecting the crane working positions:

- Access to the lift location for the crane and the bridge component including geotechnical conditions for crane (quality and compaction of base material)
- The lift weight, slew and height required to move the bridge component to its final location
- Overhead utilities. Refer to NSW Workcover *Work Near Overhead Power Lines* Code of Practice 2006.
- Underground utilities including stormwater, sewer, gas and water pipes.

The typical sizes and weights of the precast bridge components are listed in Table 4-3. The sizes shown relate to a rectangular prism the component will fit entirely into, not the actual dimensions of the component.

IMPORTANT NOTE:
The unit weights below are based on theoretical analysis and are provided for indicative planning purposes only as actual fabricated wright will vary. All component weights should be verified by precast supplier after casting of the component and the actual weights used for transport and carnage of components

Component	Overall Dimension (Width x Height/Breadth x Length)	Approximate Weight (t) Based on density 2.55 t/m3	Approximate Weight (t) Based on Density 2.50 t/m4
Type 1 - internal Precast concrete Module - 12 m	2470 x 600 x 11970	19.7	19.3
Type 1 - internal Precast concrete Module - 10 m	2470 x 600 x 9970	16.4	16.1
Type 1 - internal Precast concrete Module - 8 m	2470 x 600 x 7970	13.1	12.8
Type 1 - external Precast concrete Module - 12 m	2060 x 755 x 11970	20.2	19.8
Type 1 - external Precast concrete Module - 10 m	2060 x 755 x 9970	16.9	16.6
Type 1 - external Precast concrete Module - 8 m	2060 x 755 x 7970	13.5	13.2
Type 1 - Precast abutment Sill Beam	980 x 1773 x 9200	23.2	22.7
Type 1 - Precast Headstock - 900 Deep (3 voids)	900 x 1038 x 9200	18.4	18.0
Type 1 - Precast Headstock - 900 Deep (5 voids)		17.0	16.7
Type 1 - Pier Headstock - 750 Deep (4 voids)	900 x 888 x 9200	15.0	14.7
Type 1 - Pier Headstock - 750 Deep (6 voids)		13.8	13.5
Type 1 - precast abutment wingwall - 4.6 m	600 x 1635 x 4600	6.3	6.2
Type 1 - precast abutment wingwall - 3.7 m	600 x 1635 x 3700	5.4	5.3
Type 1 - Module Holding Down Bracket	311 x 327 x 200	0.050	0.1
Type 2 -external Precast concrete Module - 12 m	2410 x 755 x 11970	22.7	22.3

Component	Overall Dimension (Width x Height/Breadth x Length)	Approximate Weight (t) Based on density 2.55 t/m3	Approximate Weight (t) Based on Density 2.50 t/m4
Type 2 -external Precast concrete Module - 10 m	2410 x 755 x 9970	18.9	18.5
Type 2 -external Precast concrete Module - 8 m	2410 x 755 x 7970	15.1	14.8
Type 2 - Precast abutment Sill Beam	900 x 1635 x 4900	11.4	11.2
Type 2 - Precast Headstock - 900 Deep (2 voids)	900 x 900 x 4900	9.1	8.9
Type 2 - Precast Headstock - 900 Deep (4 voids)		7.7	7.5
Type 2 - Precast Headstock - 750 Deep (4 voids)	900 x 750 x 4900	6.5	6.4
Type 2 - precast abutment wingwall - 4.6 m	600 x 1635 x 4600	6.3	6.2
Type 2 - precast abutment wingwall - 3.7 m	600 x 1635 x 3700	5.4	5.3
Type 2 - Module Holding Down Bracket	311 x 327 x 200	0.05	0.05
Type 3 - external precast concrete Module - 12 m	2420 x 755 x 11980	23.5	23.0
Type 3 - external precast concrete Module - 10 m	2420 x 755 x 9980	19.6	19.2
Type 3 - external precast concrete Module - 8 m	2420 x 755 x 7980	15.8	15.5
Type 3 - precast abutment Sill Beam	900 x 1635 x 4900	11.0	10.8
Type 3 - precast Headstock - 900 Deep (2 voids)	900 x 900 x 4900	8.7	8.6
Type 3 - precast Headstock - 900 Deep (3 voids)		8.0	7.8
Type 3 - precast Headstock - 900 Deep (4 voids)		7.3	7.2
Type 3 - Pier Headstock - 750 Deep (4 voids)	900 x 750 x 4900	6.1	6.0
Type 3 - Precast abutment Wingwall - 4.6 m	600 x 1635 x 4600	6.3	6.2
Type 3 - Precast abutment Wingwall - 3.7 m	600 x 1635 x 3700	5.4	5.3
Type 3 - Module Restraint & Holding Down Bracket	400 x 400 x 390	0.130	0.130

Table 4-3 Component weights

4.2.3 Working at Height

The planning phase methodologies for construction should include the risk of working at heights. The use of precast components, and ensuring elements such as an analysis of traffic barriers and hold down brackets are attached before erection, reduces the risk for working at heights however additional temporary handrails are required to comply with minimum 900 above deck surface for edge protection.

Equipment such as Elevated Work Platforms (EWP) and scaffolds will be required to ensure safe access and egress during the construction.

The arrangements for working at height must comply with the working at heights requirements specified in Section 3.1.3.

4.3 Specialist equipment

Dependant on the location and specific bridge requirements, certain specialist equipment may be also required for the works. A sample list is provided in Table 4.4. Note that it does not list the major plant (cranes, piling rigs, heavy vehicles, etc) previously discussed as needed for the work.

(1) Component	(2) Equipment Required
Deck module	• Temporary support jacks • Chocks and packers
Grouting equipment and materials	• Grout mixer
Insitu concrete closure strip	• Formwork to fully support the section being cast • Concrete pump or kibbles or other means of placing the concrete. • 3% x-fall screed • Concrete vibrators
Substructure	• Tremmie pipe for cast-in-situ piles/columns

Table 4.4: CBS Specialist construction equipment

4.4 Demolition

Where the intended construction sequence requires demolition of the existing bridge, an engineer and licensed demolition contractor should be engaged to prepare a demolition plan and undertake the work. Hazardous materials handling and disposal (lead, asbestos, etc) should be considered in this plan as they may be present in the existing bridge materials.

5 Setting up the worksite

This section describes the general requirements and considerations in setting up a project site for a CBS bridge.

5.1 Site preparation

It is important to ensure the worksite is suitable for all aspects of the construction of the bridge. Spatial and ground condition (level, need for clearing, erosion and sediment control) consideration should be given to the following as a matter of best practice:

- Onsite facilities such as temporary site offices, a first aid room, staff lunchroom, toilets, etc
- Materials set down and storage areas (level ground is required to avoid concentrated loads on precast components – try not to store on site if possible).
- Erosion and sediment control
- Clearly documented and delineated separate pedestrian and vehicle/plant route for construction purposes
- Traffic management for the general public
- Stockpile areas for any excavated material

- Site security prohibiting unauthorised access.
- Emergency assembly points
- Limit of works
- Crane pads
- Concrete washout/disposal areas

5.2 Site access and egress

Construction site access and egress must be considered separately for people and plant with the two clearly delineated with interaction documented, minimised and controlled.

5.2.1. Workers on Foot

Project planning is an integral part of keeping workers on foot safe from coming into contact with mobile plant. The planning commences with the review of project activities to identify the potential conflict points of mobile plant and workers on foot. Where possible, the activities should be scheduled to eliminate risk of activities occurring concurrently within a small foot print area. This plan should be reviewed progressively throughout the life cycle of the project.

5.2.2. Plant and Equipment

Temporary access roadways into the construction site should be laid out to have adequate width and capacity to provide access and egress for:

- Working platforms for cranes and piling rigs to enter the site, move to their operating positions, and to operate
- Heavy vehicles or other plant to deliver precast components and materials i.e. semi-trailers (GVM of 42.5 tonnes), concrete trucks, concrete pumps and general site deliveries.
- The installation of working platforms.
- Small plant and equipment

Temporary access roadways, set down areas and working platform positions should be arranged to reduce materials handling. Good planning will improve efficiencies during construction.

It is prudent to determine the route to access the site on public roads in the planning process to be fully aware of route restrictions (width/mass) prior to transport of plant or materials.

The access arrangements may also need to include a temporary bridge to allow the road to remain operational while the bridge is replaced.

5.3 Provisions for traffic management during construction

Traffic management will usually be required during the construction of the new bridge. It is important that any traffic management plans be compliant with AS1742.3. Industry best practice is to provide traffic control in accordance with Roads and Maritime *Traffic Control at Work Sites* publication.

Provisions to maintain traffic flow during the works might include any or all of the following:

- Road closures and traffic detours
- Detour or side track onto/ through the construction site
- Staging the construction to move traffic flow between the existing bridge and the new bridge.

5.4 Setting out

The precast concrete components of the CBS bridge system are designed with position tolerances to aid in their assembly. Accurate set out of the components within these tolerances is crucial to ensure they fit together. It is especially important to accurately position the foundations and substructure to ensure the precast components can be placed without clashing.

Photo of headstock alignment

Care should be taken to accurately place permanent survey marks in locations that will not be damaged by construction activities. These should include Temporary Bench Marks (TBM) and permanent survey points either on centreline or offset to the new bridge.

It is recommended that qualified or experienced surveyors who are familiar with setting out of structural works be engaged for this task. These permanent survey marks will then allow either experienced bridge personnel or a surveyor to provide the required survey input and control for the works.

5.5 Utilities

Existing services and utilities on and around the worksite will usually require protection and clear markings for easy identification during the construction of the bridge. The results of the investigation stage should have revealed which services are present and where they are located.

However, it is possible that Dial Before You Dig (DBYD) and other service searches undertaken at the investigation stage may not have located all the services running through the site, or that new work may have taken place since the initial investigation.

Before starting construction, industry best practice is to engage a utility locator to positively locate and mark the services that are present on the site, usually with the assistance of a qualified surveyor. Reconfirming the location and type of utilities in the work area will avoid construction delays and service disruptions to the local area.

The utility owner should be contacted to confirm what protection is required for their services during construction. The utility owner may also have specific restrictions for work adjacent to their asset that will need consideration in planning and staging the work.

Many utilities have limitations on the amount of vibration they can withstand during construction; this is especially important to monitor when works are adjacent to medium to high pressure gas mains.

6 Construction sequence

The user should note that the CBS system provides standard designs for the superstructure of the bridge whilst the substructure, including foundations, will be site specific. Bridge designs can vary significantly depending on geotechnical conditions, waterways, traffic constraints, location and other site specific constraints, and generally a site specific design is required for the foundation and substructure.

Subsequently in regards to constructing the bridge, this guide will focus on the standard CBS components only and provides detail on the foundation and substructure construction in relation to the construction tolerances required to ensure the CBS components accurately fit together.

The construction sequence can be modified to suit specific site requirements however it is important to obtain specialist advice for and amendments or deviations from standard practice as many of the bridge components are designed on the assumption that this sequence will be followed.

6.1 Bridge options and form

The bridge options and form will have been determined from the CBS Suitability and Investigation Guide and designed in accordance with the CBS Design Guide and may be a Type 1, Type 2, or Type 3 configuration.

6.1.1 Type 1: Two lane (8.5m carriageway)

This arrangement comprises **four** precast concrete Double-T deck modules joined with longitudinal cast insitu concrete closure strips. The cross section provides a two-way, three per cent cross fall and a 150 mm high kerb at each side with a low performance level steel traffic barrier.

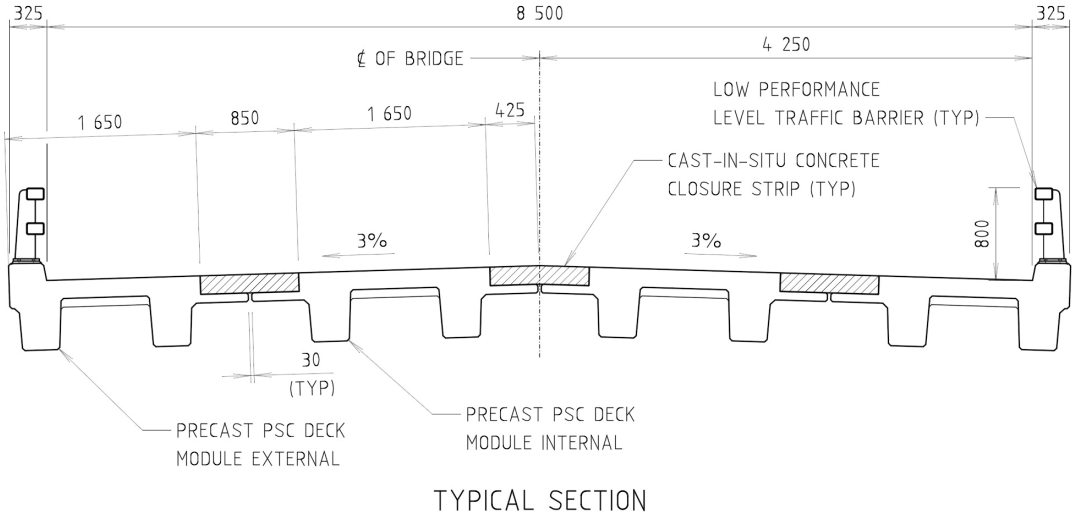

Figure 7-1: Two lane bridge option

6.1.2 Type 2: Single lane – insitu closure pour (4.2m carriageway)

This arrangement comprises **two** precast concrete deck modules joined by a single central longitudinal cast insitu concrete closure strip. The cross section provides a consistent 2% cross fall and a 150 mm high kerb at each side with a low performance level steel traffic barrier.

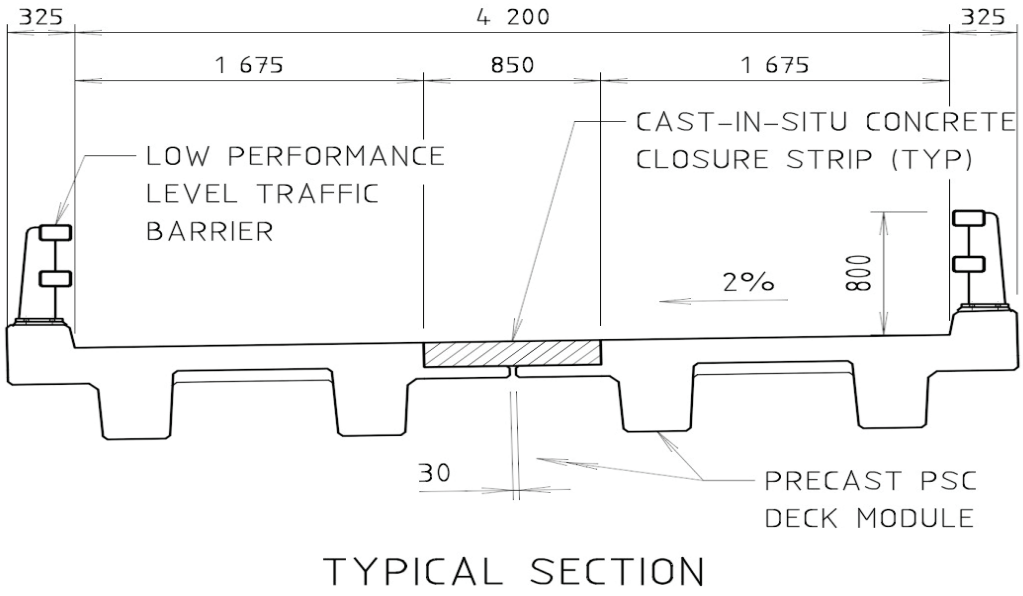

Figure 7-2: Single lane – Insitu closure pour option

6.1.3 Type 3: Single lane – longitudinal joint (4.2m carriageway)

This arrangement comprises **two** precast concrete deck modules with a longitudinal joint between them. The cross section provides a consistent 2% cross fall and a 150 mm high kerb at each side with a low performance level steel traffic barrier. This option has a limitation on heavy goods vehicle use.

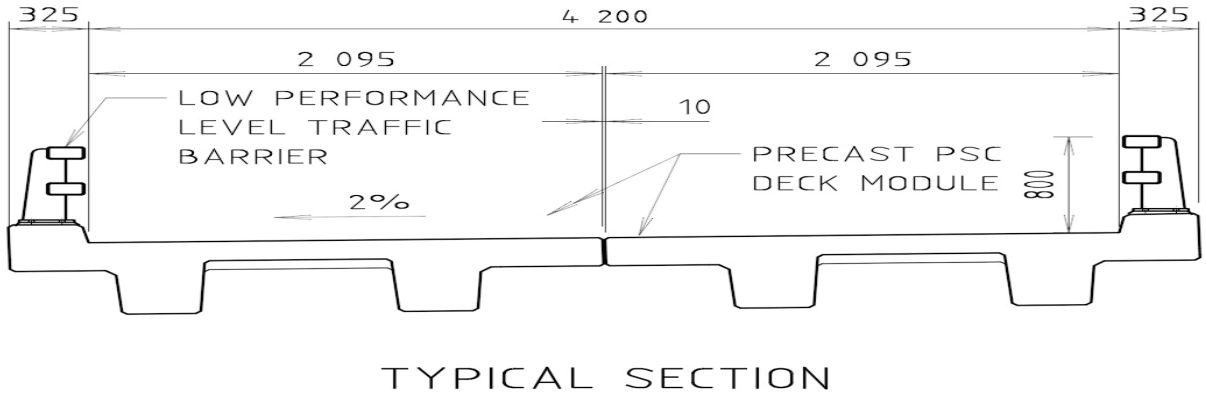

Figure 6-3: Single lane – no insitu deck concrete

6.2 Foundations and substructure

6.2.1 Substructure types

The following foundation types may be applicable for the CBS system bridges:

- Substructure option 1: circular columns and spread footings/pile caps at piers and spread footings/pile cap at abutments as shown in CBS standard drawings
- Substructure option 2: precast reinforced driven concrete piles at piers and abutments as shown in CBS standard drawings
- Bored piles (not covered by the CBS system).

6.2.1.1 Option 1 – Spread footings/pile caps

Accurate positioning of the cast insitu footings connection details to the precast components is critical to ensure accurate fitment to the CBS system.

With spread footings/pile caps the critical detail is the positioning of reinforcement in the spread footing of the abutments and the top of the columns for any piers to ensure that it does not clash with the reinforcement in the precast abutments and headstocks.

6.2.1.2 Option 2 – Precast reinforced concrete driven piles

The positioning of the precast reinforced concrete piles must comply with the specified design tolerances to allow the precast components to fit together. The driven pile tolerances are as follows:

- Lateral position of top of pile: +/- 75 mm (in any direction)
- Reduced level of top of pile concrete after cut back: + 0 mm / - 25 mm
- Tolerance at toe of pile (site specific and calculated by the designer during the design of the piles).

IMPORTANT NOTE:
If one or more piles are not installed within the lateral position tolerance, a match cast or poured insitu headstock or abutment may be required instead of a precast headstock.

The match cast or insitu headstock or abutment will require detailed design, and certification which will add to the construction cost and time.

There are practical options to reduce the risk of 'out of tolerance' driven piles:

1. Pre-boring a pilot hole for the pile will assist in keeping the pile within lateral position tolerance. The depth of the pilot hole should not be excessive as the pile stability is reliant on the downwards friction generated when driven into the soil. The length and diameter of the pilot hole should be determined by a qualified geotechnical engineer.
2. If time allows piles can be driven and accurately surveyed before match casting of headstocks and abutments subsequently allowing some adjustments in precast elements to ensure accurate fitment.

It should be noted that care and diligence should still occur in the piling operation as adjustments to the precast abutments and headstocks block outs is limited to the following tolerances as noted on the standard drawings.

6.3 CBS Precast Abutments and Headstocks

This section provides general guidance on the erection of the precast abutments and headstocks to the previously constructed substructure and/or foundations.

6.3.1 Substructure Option 1

The CBS substructure option 1 of circular columns and spread footings/pile caps at piers and spread footings/pile cap at abutments has been designed so the substructure component provides temporary support to the precast components.

The general steps required to erect the abutments and headstocks are:

1. Provide safe access and egress for personnel.
   If working at heights is required, this will need special attention and consideration should be given to utilise the access for all activities including bearing installation and formwork for the diaphragms.
2. Prior to placement the precast components, spread footings and/or columns should be clearly marked with centreline and end lines to assist with accurate placement.

Photo of headstock clearly marked to assist with accurate placement

3. The tops of the columns and/or spread footings should be prepared so the abutment or pier headstock can be placed horizontally and level.
   At abutments, if placing directly on spread footing, a 15mm nominal gap is required and packers should be placed evenly and accurately. Packer height should be individually checked and set by surveyor. Care taken with this step will ensure accurate placement of the precast component.
   With headstocks, the tops of columns should be packed as per the drawings to ensure the headstock can be placed horizontally and level.

Photo of packers on Abutment plinth

4. The abutment or pier headstock is then lowered into location with care taken when lowering to avoid damage to the concrete elements, and to ensure the precast components are placed accurately.
5. Confirm the position of the abutment sill beams and pier headstocks are within tolerance and stable before releasing from the crane.

Photo showing accurate final placement of headstock

6. The block-outs at the abutment sill beam or pier headstock soffit are formed and sealed at the joint with the footing or column. Ensure the inside surfaces are roughened to provide a good bond with the cast insitu infill concrete. The abutment sill beam or pier headstock block-outs are filled with 40 MPa cast-in-situ concrete as specified on the drawings. The exposed surface of the infill pour should be adequately protected to allow proper curing.
7. The design relies on the shear interface of the abutment or pier headstock block-out surface and the cast-in-situ infill concrete. Careful placement and compaction of the cast-in-situ concrete is required to ensure the shear interface surface is able to transfer the load. The concrete should be compacted with an immersion vibrator until air bubbles are not visible.
8. Once the cast-in-situ concrete has reached 80% of 28 day strength or after 7 days, the deck modules can be placed on the abutment or pier headstock.
9. Grout the connection between the headstock soffit and column

6.3.2 Substructure Option 2

The construction sequence of CBS substructure option 2 with precast reinforced concrete piles at piers and abutments generally follows the sequence outlined in Section 8.2.1 above. However, with this option the CBS headstock components are not supported by the piles and will require temporary support during the construction sequence. The CBS headstock components will require full structural support until 7 days, unless early strength test result says otherwise (80% of 28 day strength) after pouring of the cast-in-situ infill concrete to the block-outs.

IMPORTANT NOTE:
The precast headstocks will need temporary support during the construction sequence and it is important that council engage specialist advice. Temporary support works and stability of the permanent works during construction are to be designed, verified and certified by a suitably qualified engineer experienced in bridge design with a level of expertise determined by council.

6.4 Placing Bearings and Deck Modules

The CBS bridge system utilises a proprietary laminated elastomeric bearing, with bottom attachment plates. This arrangement permits easy installation and positioning, and grouting underneath.

Types of deck modules

There are two types of deck modules.

- Type 1 and 2 external and internal modules with cast-in-situ concrete closure strip.
- Type 3 external and internal modules with a longitudinal joint

All types follow the same sequence as outlined in this section.

It is recommended that the traffic barriers are installed on the external modules before they are lifted into place. The CBS bridge has been designed to accommodate low performance level traffic barriers, however this barrier requires an additional handrail (minimum 900mm above deck height) to provide a safe working at height control.

Installation sequence

a) The bearing installation procedure is:

- Nylon screws inserted to plate face down, protruding 15mm
- Plate placed on abutment/headstock with dowel going into formed hole in concrete element
- Bearing placed on top of protruding pin and lowered onto plate

Photo of assembled bearings before placement (shown upside down for clarity)

b) It must be noted that the nylon screws in the bearing plate are not designed to be load carrying and are provided for final adjustment of bearings. A series of temporary packers will be required to support the deck modules until the bearings have been grouted and the grout has reached strength. Careful layout and levelling is required to ensure accurate placement of decks vertically and avoid restricting access to the grouting of bearings.

Photo of temporary packers used on trial bridge

c) The deck modules, headstocks and abutments should be clearly marked prior to erection to assist with accuracy of placement of the modules. For example, a marked line longitudinally on the centreline of the deck module webs and a matching line vertically on the headstock and abutments allows for accurate placement. Additionally, the gap between the precast components at deck level also requires monitoring during deck module placement to ensure the 25mm joint between spans is obtained as per the drawings. Careful planning and set out at this step will help to ensure the following steps run smoothly.

Photo of aligning deck module unit during erection to centreline markings

d) Modules are lifted to their final position and supported by the temporary packers. It is recommended that modules are placed in a systematic order i.e. for a 2-lane bridge placing an external unit first followed by the adjacent internal units with the opposite external unit placed last. To unhook the deck modules, workers will need to get on the bridge deck and have a harness for working at heights during this process.

e) The nylon screws under each bearing plate are adjusted so the bearing is firmly and evenly pressed into the recess in the deck module. The bearing plate and soffit of the deck module shall be parallel.

f) The bearing grout pad is now constructed as per the drawings. Adherence to the notes on the drawings, including the recommended grouting material, is important as the grout pad must be well constructed and not have any voids underneath the bearing plate.

Photo showing formwork for bearing grout pad and temporary packer

g) Once the grout has reached a strength of 5 MPa the temporary supports and formwork can be removed.

6.5 Completion Works

The following items are required to complete the bridge structure.

6.5.1 Shear Key Connection at Piers and Abutments

On Type 1 and Type 2 arrangements there is a shear key connection detail between the abutment and headstocks and the deck modules. This is not required in a Type 3 arrangement.

Simple soffit formwork is required between the deck units at each end of all deck modules. Above the shear key plinths this formwork needs to allow for the shear key connection detail as shown on the drawings and figure. The fabricated capping piece for the shear pin should be fixed in place at this time.

Photo of soffit formwork at shear key plinth

6.5.2 Module Holding Down Bracket

The module holding down bracket should be attached to the precast deck modules before delivery to site. Once the bearings have been grouted, the temporary bracket support assembly should be removed and the holding down brackets permanently bolted in place as per the details on the drawings.

6.5.3 Cast-in-situ deck concrete

On Type 1 and Type 2 arrangements, a cast-in-situ concrete closure pour is required to complete the bridge deck. This is not required in a Type 3 arrangement.

The bridge cross section is formed by placing deck modules side by side with the flanges of adjacent modules providing a soffit with a 30mm nominal gap.

The cast-in-situ deck concrete installation sequence is generally as follows:

1. Ensure the soffit is fully formed by closing the 30mm nominal gap between deck modules using 100mm bitumen impregnated tape and ensuring formwork is placed as outlined in section 7.5.1.
2. Place and tie reinforcement as per drawings.
3. Place formwork to form the transverse joint detail. On bridges of more than one span careful consideration should be given to forming the joint detail at piers as the form needs to be rigid enough to hold the weight of concrete whilst being removable. Given the joint detail is 15mm wide with a 25mm wide thickening near the surface it is recommended that purpose made steel form is considered for this step.

Photo of formwork for joint detail above piers in multi-span bridge

4. The placing of concrete to complete the bridge deck is an important step. Due care should be taken to ensure the concrete is placed and compacted as per RMS Specification B80 with particular attention being placed on compliance with Section 7.4 Concrete Placement and Compaction – Basic Requirements. Attention to ensure concrete vibration is carried out in a regular and systematic manner to ensure all the concrete is thoroughly compacted, including the use of vibrating screeds, is strongly recommended. The proper construction of the cast-in-situ deck concrete is critical to the overall structural integrity of the CBS system. Note that placing of concrete must be by concrete pump or crane and kibble as concrete trucks are not allowed on the bridge deck.

Photo showing provision of adequate resources, compacting equipment and tools for cast-in-situ deck pour

Carry out vibration in a regular and systematic manner to ensure all the concrete is thoroughly compacted

5. Care should be taken to ensure the cast-in-situ deck concrete finished levels are consistent and provide an even surface, particular attention will be required to complete the crown on the centre line of the Type 1 bridge. Finishing must consist of steel trowelling followed by sweeping the surface transversely with a stiff-bristled yard broom to produce a uniformly roughened surface.

Photo of broom finish to stitch pours

6. It is recommended that curing be carried out by the wet curing method with the aim to protect the concrete surface from extreme heat or cold and maintain at a temperature not less than 50C throughout the curing period of 72 hours. Wet curing consists of the cast-in-situ concrete surfaces being wetted and completely covered with canvas, hessian, geofabric with plastic sheeting, or other suitable materials and be kept continuously wet. Water used for curing must conform to AS 1379 and be not more than 100C cooler than the concrete surface.

Photo of curing of stitch pours

6.5.4 Abutment Wingwalls

The abutment wingwalls should ideally be erected and temporary propped to allow placing of concrete in the in-situ concrete stitch to abutment at the same time as placing of concrete to complete the bridge deck. The wingwalls should be placed on packers on well compacted fill material or a concrete blinding layer to ensure accurate placement.

Photo of erection of precast wingwall

Photo of wingwall propping and stitch pour

6.5.5 Deck Joints

There is a nominal 20 mm wide gap between spans at piers and between the deck and abutment curtain wall cap. These gaps are sealed with a proprietary cold applied sealant joint over backing rod.

The joints shall be installed in accordance to the details in the drawings and the manufacturer's instructions. For guidelines on installing the joints, refer to general notes on the drawings and Roads and Maritime Services Specification D&C B312 *Cold Applied Elastomeric Joint Sealants*.

6.5.6 Completion of Traffic Barriers

It is recommended the low performance level traffic barrier be installed on the external deck modules before erection to provide the basis of edge protection.

A temporary hand railing should be fitted to the barrier to comply with the minimum working at height requirements for temporary edge protection, as stated in the NSW WorkCover Managing the risk of falls at workplaces code of practice July 2015 and AS4994 2010.

Traffic barriers railings require joints as per the details in the drawings. The internal joint sleeve should already be placed inside the railing prior to erection, and simply requires sliding in to place and bolting.

The traffic barrier rails require installation on the abutment wingwalls, and to accommodate the transition in barriers at the road approaches, a thrie beam connection bracket is to be installed as per the drawings. Grouting under base plates with height adjustments (2 nuts) completes the task.

Traffic barriers railings require joints as per the details in the drawings. The internal joint sleeve should already be placed inside the railing prior to erection and simply requires sliding in to place and bolting. The traffic barrier rails require installation on the abutment wingwalls and to accommodate the transition in barriers at the road approaches a thrie beam connection bracket is to be installed as per the drawings. It is recommended that the traffic barrier rails on the abutment wing walls are completed after the completion of abutment backfill and any associated roadworks.

6.5.7 General Sealing

Sealing of gaps between precast and cast-in-situ elements is required as detailed in the drawings. Typical locations include:

- Between columns and headstocks
- Between abutments and spread footings
- Between abutments and abutment wing walls

6.5.8 Backfilling of the bridge abutments

Backfilling of bridge abutments should not occur until 7 days after completion of the in-situ concrete joint between abutments and wingwalls in accordance with specification B30.

Install the back of abutment wall subsoil drainage pipe as detailed in the drawings before backfill commences

7.5.9. Scour protection

The CBS system requires scour protection to protect the bridge abutments from scouring due to fast moving waterways and flooding. The type and extent of protection depends on the waterways flood height/flow rate.

For simplicity and ease of construction, scour rock is recommended. Scour rock may not always be the most cost effective due to haulage distance. Determining the best solution will need an engineering assessment.

Scour protection options include:

- Rock protection
- Grouted mattresses
- Revetment mattresses
- Gabion mattresses.

7 Handling of precast components

This section outlines basic lifting and handling guidelines that should be followed to ensure the precast components are carried and unloaded safely.

The precast concrete components are fitted with lifting anchors to assist in their safe lifting, stacking and installation.

7.1 Transport

The precast bridge components are large and bulky items, therefore it is important they be properly loaded and secured during transport. Reference should be made to the guidelines for restraining loads contained in the National Transport Commission and Roads and Maritime, *Load restraint guide, Guidelines and Performance Standards for the Safe Carriage of Loads on Road Vehicles.*

When transporting the precast components:

- Precast components should be loaded with a crane; however large forklift trucks may be used with the appropriate spreader beams and chains.
- The precast components must be supported on timber packers placed underneath the lifting anchor positions (or at the $^{1}/_{5}$ and $^{4}/_{5}$ positions).
- The timber packers should be deep enough to prevent contact between the precast component and the hog of the trailer. Minimum packer size shall be 150 mm x 75 mm.
- The precast component should be secured with four tie-down chains. For longer precast components use a pair of chains at each lifting anchor or bearer.

- The edges of the precast components should be protected from the tie-down chains. Where components are stacked together they should be protected from rubbing against each other.
- Consideration should be given to method of securing the deck units to prevent damage to the concrete flanges.

Photo of external precast deck module secured with four tie-down chains

7.2 On-load and off-load lifting

The various precast components have lifting anchors. The anchor size and capacities are shown on each of the relevant drawings.

To ensure the lifting anchors are not overloaded, the angle between the chains at the crane hook should not be greater than 60 degrees. A spreader beam may be required where this angle is likely to be exceeded.

7.3 Site storage

Concentrated loads between the precast component and the ground must be avoided and the components should be stored on even ground at all times.

The precast components must be supported on timber packers and the timber packers shall be placed underneath the lifting anchor positions (or at the $^{1}/_{5}$ and $^{4}/_{5}$ positions). Minimum packer size shall be 150 mm x 75 mm.

The edges of the precast components should be protected against damage. Where components are stacked together they should be protected from rubbing against each other.

- Precast deck modules shall not be stacked more than two high
- Precast headstocks or abutments shall not be stacked.

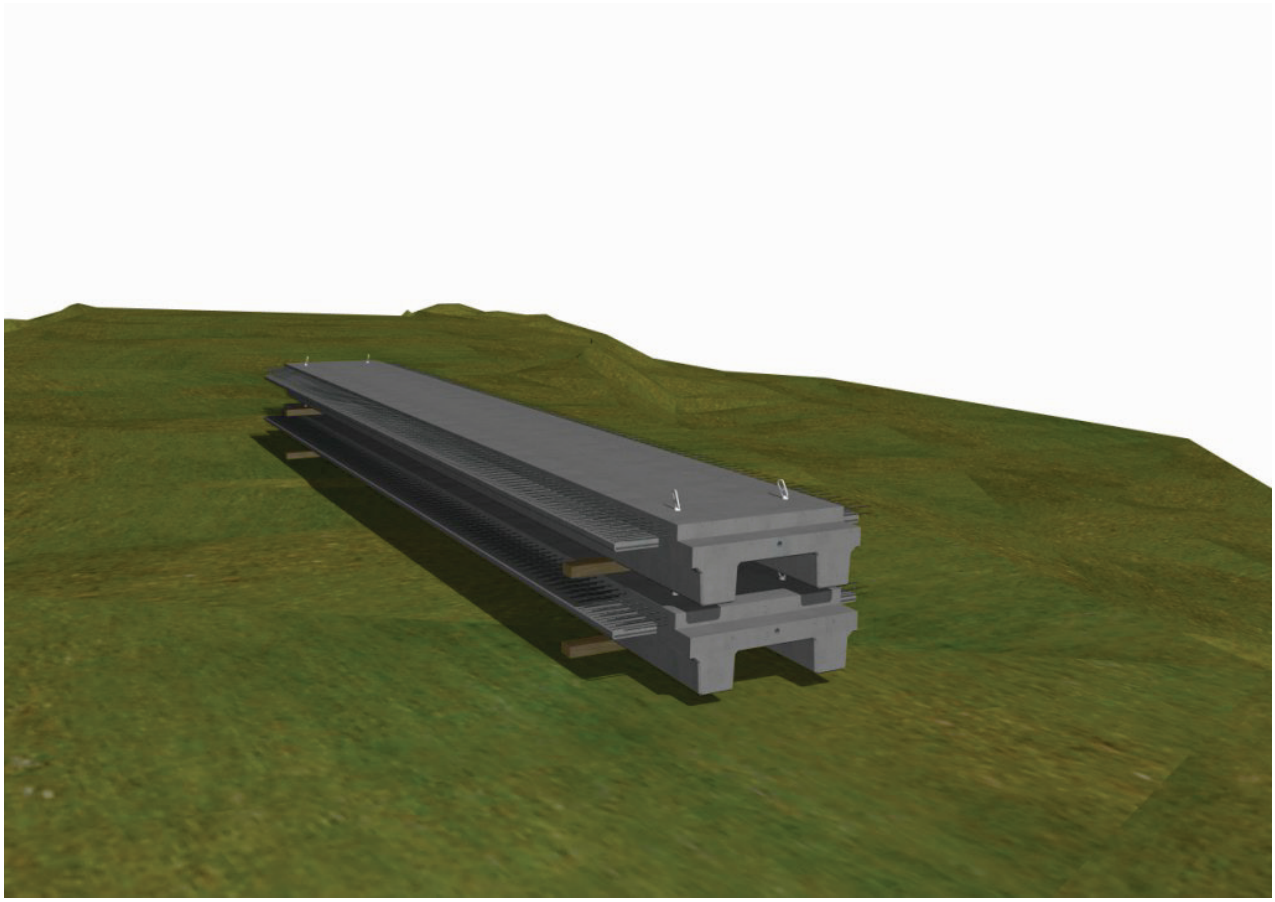

Figure 10-1: Stacked deck modules

8 Construction documentation

The construction documentation typically prepared at the conclusion of the construction stage will include:

- Construction certificate which verifies the bridge has been constructed in accordance with the design documentation
- Work As Executed drawings
- Construction phase documentation, such as:
  - Requests for information (RFI)
  - Non-conformances (NCR).

9 References

The following publications were referred to in this guide:

- AS1742.3:2009 *Manual of Uniform Traffic Control Devices Part 3: Traffic control for works on roads*
- National Transport Commission and Roads and Maritime (2nd Edition, 2004), *Load restraint guide, Guidelines and Performance Standards for the Safe Carriage of Loads on Road Vehicles.*
- WorkCover NSW *Managing the risk of falls at workplaces code of practice* July 2015
- Austroads Guide to Traffic Management Part 3: Traffic Studies and Analysis
- Australian Standard AS5100 *Bridge Design (2004)*
- NSW Environmental Planning and Assessment Act (1979)
- NSW Work Health and Safety Act and Regulation 2011 and the Safe design of structures Code of Practice

9.1 Country Bridge Solutions materials

- Country Bridges Solutions: Overarching guide
- Country Bridges Solutions: Suitability and investigation guide
- Country Bridges Solutions: Design guide
- Country Bridges Solutions: Construction guide
- Country Bridges Solutions: Operation and maintenance guide

rms.nsw.gov.au/countrybridgesolutions

13 22 13

Customer feedback
Roads and Maritime
Locked Bag 928,
North Sydney NSW 2059

September 2016
RMS 16.500
ISBN: 978-1-925582-14-7